PRELIMINARY/FINAL LAND DEVELOPMENT PLAN

FOR

SWATARA PAXTON DEVELOPERS LLC
PROPOSED WAWA FOOD MARKET & FUELING STATION

PARCEL NO. 63-022-037
US ROUTE 322 & BRIDGE ROAD (SR 2018)
TOWNSHIP OF SWATARA
DAUPHIN COUNTY, PENNSYLVANIA

PUBLIC UTILITY PROVIDERS		
UTILITY SERVICE	COMPANY	CONTACT
ELECTRIC	"PPL ELECTRIC UTILITES CORPORATION ADDRESS: 827 HAUSMAN ROAD, ALLENTOWN 18104"	"ATTN: JODY PIAGESI EMAIL: JPIAGESI@PPLWEB.COM PHONE: 888-220-9991"
GAS	"UGI UTILITIES ADDRESS: 1 UGI DRIVE, DENVER, PA 17057"	"ATTN: ERIC CLAIR EMAIL: ECLAIR@UGI.COM PHONE: 484-824-2927"
SANITARY SEWER	"SWATARA TOWNSHIP AUTHORITY ADDRESS: 599 EISENHOWER BOULEVARD, HARRISBURG, PA 17111"	"ATTN: MIKE VARNER EMAIL: MVARNER@SWATARATWPAUTHORITY-PA.GOV PHONE: 717-566-3361"
WATER	"VEOLIA PENNSYLVANIA ADDRESS: 6310 ALLENTOWN BLVD, SUITE 104, HARRISBURG 17112"	"ATTN: KARA NIES EMAIL: KARA.NIES@VEOLIA.COM PHONE: 717-901-6320"

COMMONWEALTH OF PENNSYLVANIA
COUNTY OF DAUPHIN

ON THIS THE _____ DAY OF _____ 20_____ BEFORE ME THE UNDERSIGNED PERSONALLY APPEARED:

OWNER(S) _____

OWNER(S) _____

WHO BEING DULY SWORN ACCORDING TO LAW, DEPOSE AND SAY THAT THEY ARE THE OWNERS OF THE PROPERTY SHOWN ON THIS PLAN AND THAT THEY ACKNOWLEDGE THE SAME TO BE THEIR ACT AND DEED AND DESIRE THE SAME TO BE RECORDED AS SUCH ACCORDING TO LAW.

WITNESS MY HAND AND NOTORIAL SEAL THE DAY AND THE DATE ABOVE WRITTEN:

_____ _____
MY COMMISSION EXPIRES NOTARY PUBLIC

IT IS HEREBY CERTIFIED THAT THE UNDERSIGNED ARE THE EQUITABLE OWNERS OF THE PROPERTY SHOWN ON THIS PLAT AND THAT ALL STREETS OR PARTS THEREOF, IF NOT PREVIOUSLY DEDICATED, ARE HEREBY TENDERED FOR DEDICATION TO PUBLIC USE.

OWNER(S) _____

OWNER(S) _____

OWNER(S) _____

I HEREBY CERTIFY THIS PLAN TO BE CORRECT AS SHOWN.

_____
REGISTERED SURVEYOR

JAMES A. CONWAY JR
826 NEWTOWN YARDLEY RD
SUITE 201, NEWTOWN, PA 18940

THIS PLAN REVIEWED BY THE DAUPHIN COUNTY PLANNING COMMISSION THIS _____ DAY OF _____ 20___

CHAIRMAN _____

SECRETARY _____

THIS PLAN RECOMMENDED FOR APPROVAL BY THE SWATARA TOWNSHIP PLANNING COMMISSION THIS _____ DAY OF _____, 20___

CHAIRMAN _____

SECRETARY _____

THIS PLAN APPROVED BY THE BOARD OF COMMISSIONERS OF SWATARA TOWNSHIP THIS _____ DAY OF _____ 20___

PRESIDENT _____

SECRETARY _____

THIS PLAN RECORDED IN THE OFFICE OF THE RECORDER OF DEEDS IN AND FOR DAUPHIN COUNTY THIS _____ DAY OF _____, 20___

PLAN BOOK _____ VOLUME _____ PAGE _____

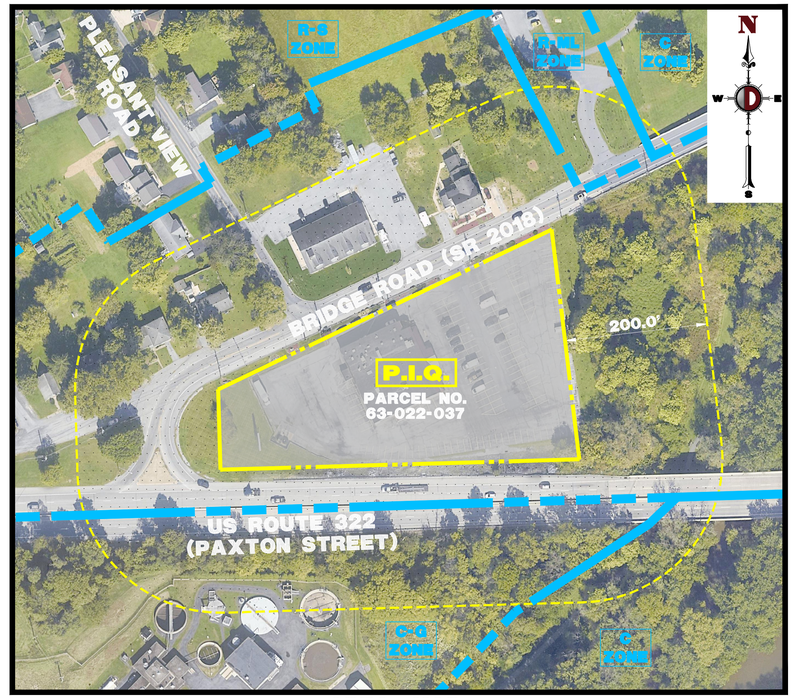

AREA MAP
1" = 100'

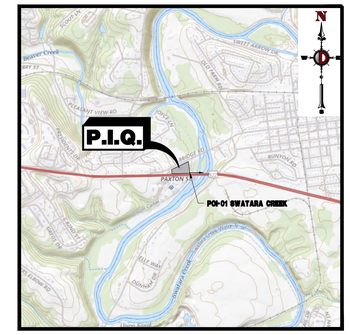

USGS MAP
1" = 2000'

DRAWING INDEX (LAST REVISED 11/21/2023)	
COVER SHEET	1 of 34
AERIAL MAP	2 of 34
GENERAL NOTES	3 of 34
DEMOLITION PLAN	4 of 34
SITE PLAN	5 of 34
GRADING PLAN	6 of 34
ADA GRADING PLAN	7 of 34
DRAINAGE PLAN	8 of 34
UTILITY PLAN	9 of 34
STORM PROFILES	10 – 11 of 34
SANITARY PROFILES	12 of 34
LIGHTING PLAN	13 of 34
LIGHTING NOTES & DETAILS	14 of 34
LIGHTING DETAILS	15 of 34
LANDSCAPING PLAN	16 of 34
LANDSCAPING NOTES & DETAILS	17 of 34
CONSTRUCTION DETAILS	18 – 19 of 34
WAWA CONSTRUCTION DETAILS	20 – 21 of 34
VEHICLE CIRCULATION PLAN (WB-50)	22 of 34
VEHICLE CIRCULATION PLAN (FIRE TRUCK)	23 of 34
VEHICLE CIRCULATION PLAN (TANKER)	24 of 34
OVERALL PCSM PLAN	25 of 34
PCSM PLAN	26 of 34
PCSM NOTES	27 of 34
PCSM DETAILS	28 – 29 of 34
EXISTING E&S PLAN	30 of 34
E&S PLAN	31 of 34
E&S NOTES	32 of 34
E&S DETAILS	33 – 34 of 34

WAWA SITE DATA TABLE	
PHYSICAL ADDRESS	US ROUTE 322 & BRIDGE ROAD (SR 2018)
WAWA STORE NO.:	TBD
BUILDING TYPE	W50 F/B
CANOPY TYPE	SLOPED
CANOPY CONFIGURATION	STACKED
NO. OF MPD'S	8
TYPE OF MPD'S	4 (4+1) & 4 (3+1+1)
NO. OF PARKING SPACES	56
NO. OF HANDICAP PARKING SPACES	3
NO. OF TRUCK/ OVERSIZED PARKING SPACES	N/A
SQ. FT. OF ASPHALT (INSIDE R.O.W.)	41,825 SF
SQ. FT. OF LAWN AREA (TO BE MOWED)	20,514 SF
SQ. FT. OF MULCH AREA	4,165 SF
CONTACT INFO: MICHAEL SPIEGEL WAWA, INC. 260 W. BALTIMORE PIKE WAWA, PA 19063	

PREPARED BY
DYNAMIC ENGINEERING CONSULTANTS, P.C.
826 NEWTOWN YARDLEY ROAD - SUITE 201
NEWTOWN, PA 18940
WWW.DYNAMICEC.COM

Plotted: 11/22/23 – 12:41 PM, By: ajwright
File: P:\DECPC PROJECTS\1478 Paramount Realty\99-212 Swatara PA\Dwg\Land Dev Plans\D1478992123K0.dwg, ---> 01 COVER SHEET

COPYRIGHT © 2023 – DYNAMIC ENGINEERING CONSULTANTS, PC – ALL RIGHTS RESERVED

DYNAMIC ENGINEERING • CONSULTING • DESIGN • SURVEY • TRAFFIC

REV.	DATE	COMMENTS	BY

THIS PLAN SET IS FOR PERMITTING PURPOSES ONLY AND MAY NOT BE USED FOR CONSTRUCTION

DRAWN BY: CMC | DESIGNED BY: MS | CHECKED BY: MAW | CHECKED BY: –

PROJECT: SWATARA PAXTON DEVELOPERS LLC
PROPOSED WAWA FOOD MARKET & FUELING STATION
PARCEL NO. 63-022-037
US ROUTE 322 & BRIDGE ROAD (SR 2018)
TOWNSHIP OF SWATARA, DAUPHIN COUNTY, PENNSYLVANIA

811 Know what's below. Call before you dig.
PROTECT YOURSELF
ALL STATES REQUIRE NOTIFICATION OF EXCAVATORS, DESIGNERS, OR ANY PERSON PREPARING TO DISTURB THE EARTH'S SURFACE ANYWHERE IN ANY STATE
FOR STATE SPECIFIC DIRECT PHONE NUMBERS VISIT: WWW.CALL811.COM

DYNAMIC ENGINEERING
LAND DEVELOPMENT CONSULTING • PERMITTING
GEOTECHNICAL • ENVIRONMENTAL
TRAFFIC • SURVEY • PLANNING & ZONING
826 Newtown Yardley Road
Suite 201, Newtown, PA 18940
T: 267.685.0276 | F: 267.685.0361
Offices conveniently located at:
Lake Carmel, New Jersey • T: 732.974.0198
Chester, New Jersey • T: 908.879.9229
Wallkill, New Jersey • T: 914.374.2000
Newark, New Jersey • T: 973.733.7200
Toms River, New Jersey • T: 732.974.0198
Newtown, Pennsylvania • T: 267.685.0276
Philadelphia, Pennsylvania • T: 215.283.4888
Bethlehem, Pennsylvania • T: 610.395.4400
Allen, Texas • T: 972.334.7700
Houston, Texas • T: 281.789.6400
Kyle, Texas • T: 512.644.7414
Delray Beach, Florida • T: 561.921.8370
Annapolis, Maryland • T: 410.507.3000
www.dynamicec.com

JUSTIN A. CEONNOTTI
PROFESSIONAL ENGINEER
PENNSYLVANIA LICENSE No. PE080629

MARK A. WHITAKER
PROFESSIONAL ENGINEER
NEW JERSEY LICENSE No. 41417

TITLE: COVER SHEET

SCALE: (H) AS (V) SHOWN | DATE: 11/21/2023
PROJECT No: 1478-99-212

SHEET No: 1 OF 34 | Rev. #: 0

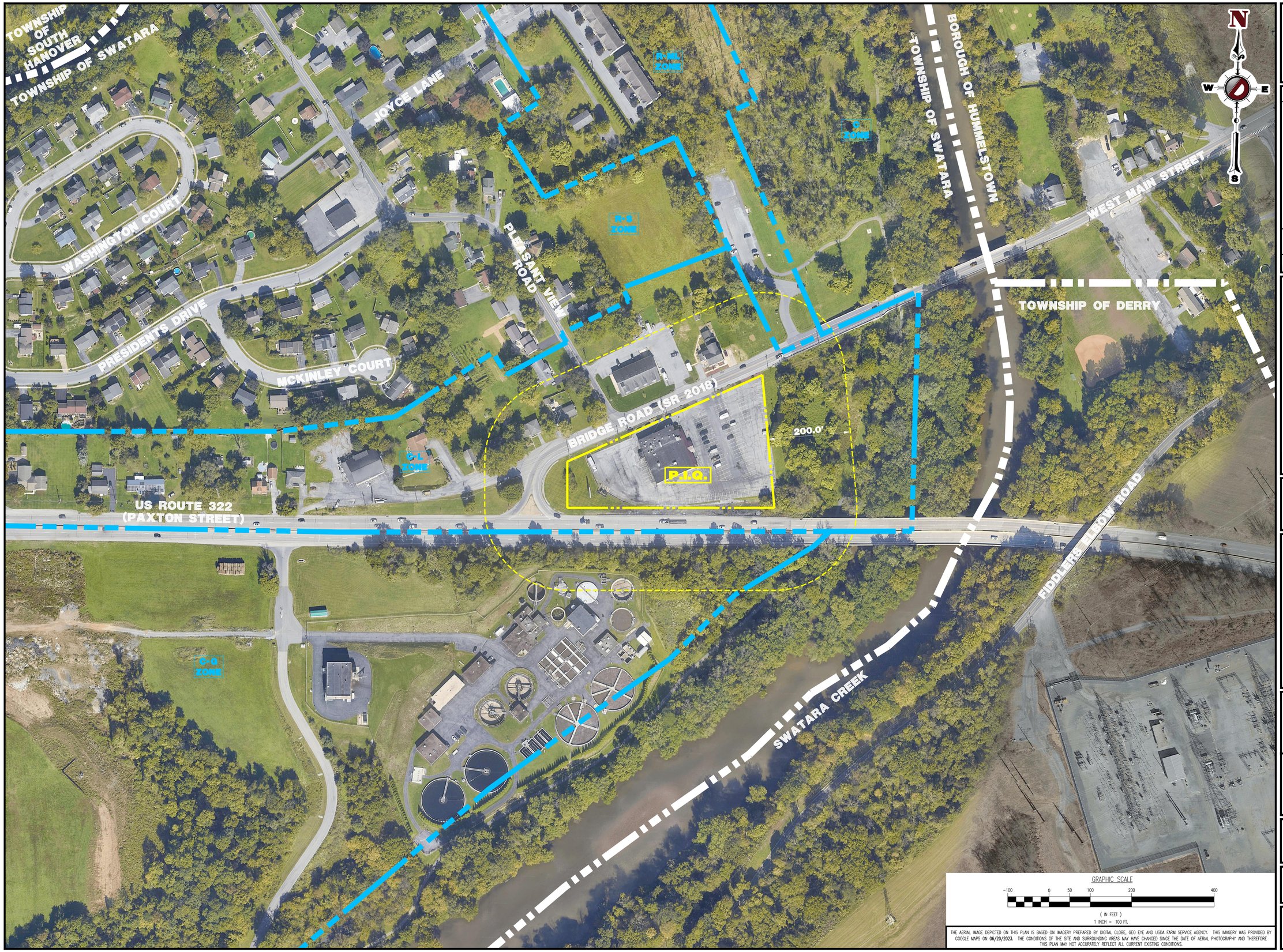

THE AERIAL IMAGE DEPICTED ON THIS PLAN IS BASED ON IMAGERY PREPARED BY DIGITAL GLOBE, GEO EYE AND USDA FARM SERVICE AGENCY. THIS IMAGERY WAS PROVIDED BY GOOGLE MAPS ON 06/20/2023. THE CONDITIONS OF THE SITE AND SURROUNDING AREAS MAY HAVE CHANGED SINCE THE DATE OF AERIAL PHOTOGRAPHY AND THEREFORE THIS PLAN MAY NOT ACCURATELY REFLECT ALL CURRENT EXISTING CONDITIONS.

Plotted: 11/22/23 – 12:41 PM, By: djwright
File: P:\DEDPc PROJECTS\1478 Paramount Realty\99-212 Swatara PA\Dwg\Land Dev Plans\D1478992125A0.dwg, ---> 02 AERIAL MAP

COPYRIGHT © 2023 – DYNAMIC ENGINEERING CONSULTANTS, PC – ALL RIGHTS RESERVED

DYNAMIC ENGINEERING CONSULTANTS, PC
DESIGN • ENVIRONMENTAL • SURVEY • TRAFFIC

REV.	DATE	COMMENTS	BY

THIS PLAN SET IS FOR PERMITTING PURPOSES ONLY AND MAY NOT BE USED FOR CONSTRUCTION

DRAWN BY: CMC
DESIGNED BY: MS
CHECKED BY: MAW
CHECKED BY: –

PROJECT: **SWATARA PAXTON DEVELOPERS LLC**
PROPOSED WAWA FOOD MARKET & FUELING STATION
PARCEL NO. 63-022-037
US ROUTE 322 & BRIDGE ROAD (SR 2018)
TOWNSHIP OF SWATARA, DAUPHIN COUNTY, PENNSYLVANIA

811 Know what's below. Call before you dig.
PROTECT YOURSELF
ALL STATES REQUIRE NOTIFICATION OF EXCAVATORS, DESIGNERS, OR ANY PERSON PREPARING TO DISTURB THE EARTH'S SURFACE ANYWHERE IN ANY STATE
FOR STATE SPECIFIC DIRECT PHONE NUMBERS VISIT: WWW.CALL811.COM

DYNAMIC ENGINEERING
LAND DEVELOPMENT CONSULTING • PERMITTING
GEOTECHNICAL • ENVIRONMENTAL
TRAFFIC • SURVEY • PLANNING & ZONING
826 Newtown Yardley Road
Suite 201, Newtown, PA 18940
T: 267.685.0276 | F: 267.685.0361
Offices conveniently located at:
Lawrenceville, New Jersey • T: 609.771.9778
Cranford, New Jersey • T: 908.879.9229
Wallington, New Jersey • T: 856.304.8000
Newark, New Jersey • T: 973.733.7200
Toms River, New Jersey • T: 732.914.0199
Newtown, Pennsylvania • T: 267.685.0276
Philadelphia, Pennsylvania • T: 215.203.4888
Bethlehem, Pennsylvania • T: 610.395.4400
Allen, Texas • T: 972.534.7700
Houston, Texas • T: 281.789.6400
Kailua, Hawaii • T: 808.944.7964
Delray Beach, Florida • T: 561.921.8370
Annapolis, Maryland • T: 443.567.3000
www.dynamicec.com

JUSTIN A. GEONNOTTI
PROFESSIONAL ENGINEER
PENNSYLVANIA LICENSE No. 080629

MARK A. WHITAKER
PROFESSIONAL ENGINEER
NEW JERSEY LICENSE No. 41417

TITLE:
AERIAL MAP

SCALE: (H) 1"=100' (V)
DATE: 11/21/2023
PROJECT No: 1478-99-212

SHEET No: 2 OF 34
Rev. #: 0

GENERAL NOTES

1. THIS PLAN HAS BEEN PREPARED BASED ON REFERENCES INCLUDING:

   ALTA/NSPS LAND TITLE SURVEY
   DYNAMIC SURVEY, LLC
   826 NEWTOWN YARDLEY ROAD, SUITE 201
   NEWTOWN PA 18940
   SURVEYOR FILE NO: 1478-99-212S

2. APPLICANT: SWATARA PAXTON DEVELOPERS LLC
   1195 ROUTE 70
   SUITE 2000
   LAKEWOOD, NJ 08701

3. OWNER: HOSS'S RESTAURANT OPERATIONS INC
   170 PATCHWAY RD
   DUNCANSVILLE PA 16635

4. PARCEL DATA: PARCEL 63-022-037
   TOWNSHIP OF SWATARA
   DAUPHIN COUNTY, PA

5. ZONE: ZONE C-L (LIMITED COMMERCIAL DISTRICT)

6. EXISTING USE: RESTAURANT **(PERMITTED USE)** (§ 295-28)

7. PROPOSED USE: AUTO SERVICE STATION **(PERMITTED USE)** (§ 295-28)

8. DEFINITIONS (§ 295-22)
   A. AUTO REPAIR GARAGE -- AN AREA WHERE REPAIRS, IMPROVEMENTS AND INSTALLATION OF PARTS AND ACCESSORIES FOR MOTOR VEHICLES AND/OR BOATS ARE CONDUCTED THAT INVOLVES WORK THAT IS MORE INTENSE IN CHARACTER THAN WORK PERMITTED UNDER THE DEFINITION OF "AUTO SERVICE STATION." AN AUTO REPAIR GARAGE SHALL INCLUDE, BUT NOT BE LIMITED TO, A USE THAT INVOLVES ANY OF THE FOLLOWING WORK: MAJOR MECHANICAL WORK OR BODYWORK, STRAIGHTENING OF BODY PARTS, PAINTING, WELDING OR REBUILDING OF TRANSMISSIONS. ANY USE PERMITTED AS PART OF AN AUTO SERVICE STATION IS ALSO PERMITTED AS PART OF AN AUTO REPAIR GARAGE. THIS USE SHALL NOT INCLUDE ACTIVITY MEETING THE DEFINITION OF A "TRUCK STOP." SEE REQUIREMENTS IN § 295-48.
   B. AUTO SERVICE STATION -- AN AREA WHERE GASOLINE IS DISPENSED INTO MOTOR VEHICLES AND WHERE NO REPAIRS ARE CONDUCTED, EXCEPT WORK THAT MAY BE CONDUCTED THAT IS CLOSELY SIMILAR IN CHARACTER TO THE FOLLOWING: SALE AND INSTALLATION OF OIL, LUBRICANTS, BATTERIES AND BELTS AND SIMILAR ACCESSORIES AND SAFETY AND EMISSION INSPECTIONS AND SALE OF PREPACKAGED PROPANE. THIS USE MAY INCLUDE A CONVENIENCE STORE, PROVIDED THAT ALL OF THE REQUIREMENTS FOR SUCH USE ARE ALSO MET. A BUSINESS THAT MAINTAINS AN ACCESSORY USE OF PROVIDING MOTOR FUEL ONLY FOR USE BY VEHICLES OPERATED BY THAT BUSINESS SHALL NOT, BY ITSELF, BE CONSIDERED TO BE AN AUTO SERVICE STATION. SEE STORAGE LIMITS AND OTHER REQUIREMENTS IN § 295-49.
   C. CONVENIENCE STORE - A USE THAT PRIMARILY SELLS ROUTINE HOUSEHOLD GOODS, GROCERIES, PREPARED READY-TO-EAT FOODS AND SIMILAR MISCELLANEOUS ITEMS TO THE GENERAL PUBLIC, BUT THAT IS NOT PRIMARILY A RESTAURANT, AND THAT INCLUDES A BUILDING WITH A FLOOR AREA OF LESS THAN 6,000 SQUARE FEET. A CONVENIENCE STORE INVOLVING THE SALE OF GASOLINE SHALL BE REGULATED AS AN AUTO SERVICE STATION
   D. RETAIL STORE -- A USE IN WHICH MERCHANDISE IS SOLD OR RENTED TO THE GENERAL PUBLIC, BUT NOT INCLUDING THE FOLLOWING: SALES OF MOTOR VEHICLES OR BOATS, ADULT MOVIE THEATER, ADULT BOOKSTORE, MANUFACTURING, TAVERN, CAR WASH, AUTO SERVICE STATION, AUTO REPAIR GARAGE, CONVENIENCE STORE OR ANY RESTAURANT.
   E. LOT, CORNER -- A LOT ABUTTING ON TWO OR MORE INTERSECTING STREETS WHICH HAS AN INTERIOR ANGLE OF LESS THAN 135° AT THE INTERSECTION OF RIGHT-OF-WAY LINES OF TWO STREETS.
   F. LOT AREA. WETLANDS (AS OFFICIALLY DEFINED UNDER FEDERAL AND/OR STATE REGULATIONS) SHALL NOT COUNT TOWARDS MORE THAN 50% OF THE REQUIRED MINIMUM LOT AREA. THE TOWNSHIP MAY REQUIRE AN APPLICANT TO PROVE THAT A LOT WILL CONTAIN SUFFICIENT CONTIGUOUS BUILDABLE LAND AREA THAT IS OUTSIDE OF WETLANDS. THIS SUBSECTION SHALL ONLY APPLY TO A LOT WITHIN A SUBDIVISION OR LAND DEVELOPMENT SUBMITTED FOR APPROVAL AFTER THE ADOPTION OF THIS CHAPTER.

9. SCHEDULE OF ZONING REQUIREMENTS (§ 295-29)

ZONE REQUIREMENT	ZONE C-L	EXISTING	PROPOSED
MINIMUM LOT AREA [3]	20,000 SF	107,253 SF (2.462 Ac.)	107,253 SF (2.462 Ac)
MINIMUM LOT WIDTH	80 FT	147.7 FT	147.7 FT
MINIMUM LOT FRONTAGE	N/S	112.1 FT	112.1 FT
MINIMUM LOT DEPTH	N/S	501.6 FT	501.6 FT
MINIMUM FRONT YARD SETBACK (BRIDGE ROAD)			
-BUILDING	50 FT [1]	29.5 FT **(E)**	111.7 FT
-CANOPY	30 FT [5]	N/A	35.7 FT
-ACCESSORY STRUCTURES	10 FT [5]	N/A	N/A
-FUEL PUMPS/DISPENSERS	50 FT [1]	N/A	51.8 FT
-PARKING	10 FT [5]	3.7 FT **(E)**	10 FT
MINIMUM FRONT YARD SETBACK (PAXTON STREET)			
-BUILDING	25 FT [4]	53.1 FT **(E)**	52.9 FT
-CANOPY	25 FT	N/A	36.9 FT
-ACCESSORY STRUCTURES	25 FT	N/A	39.0 FT
-FUEL PUMPS/DISPENSERS	25 FT	N/A	49.8 FT
-PARKING	10 FT	3.6 FT	33.2 FT
MINIMUM SIDE YARD SETBACK (WEST PROP. LINE)			
-BUILDING	10 FT	180.9 FT	333.4 FT
-CANOPY	10 FT	N/A	211.1 FT
-ACCESSORY STRUCTURES	10 FT	N/A	156.1 FT
-FUEL PUMPS/DISPENSERS	25 FT	N/A	221.6 FT
-PARKING	N/S	47.4 FT	159.1 FT
MINIMUM SIDE YARD SETBACK (EAST PROP. LINE)			
-BUILDING	10 FT	174.3 FT	89.9 FT
-CANOPY	10 FT	N/A	219.4 FT
-ACCESSORY STRUCTURES	10 FT	N/A	128.1 FT
-FUEL PUMPS/DISPENSERS	25 FT	N/A	231.0 FT
-PARKING	N/S	0.0 FT	8.0 FT
MINIMUM COMBINED SIDE YARD SETBACK (PRINCIPAL BUILDING)	N/S	N/A	N/A
MAXIMUM BUILDING HEIGHT	38 FT		33 FT
MAXIMUM BUILDING STORIES	3 STORIES		1 STORY
MAXIMUM LOT COVERAGE (BY BUILDINGS & CANOPIES)	60%	10.8% (11,558 SF)	12.5% (13,429 SF)
MAXIMUM IMPERVIOUS COVERAGE	80%	87.3% (93,651 SF) **(E)**	66.2% (71,001 SF)
MIN. GROUND FLOOR AREA	N/S		N/A

N/S: NO STANDARD N/A: NOT APPLICABLE **(E)**: EXISTING NON-CONFORMANCE **(V)**: VARIANCE

[1] FRONT YARD SETBACK IS INCREASTED TO 50 FEET WHERE PARKING EXISTS BETWEEN THE PRINCIPAL BUILDING AND AN ARTERIAL STREET. SETBACKS SHALL BE MEASURED FROM THE FUTURE/ULTIMATE RIGHT-OF-WAY.

[2] MINIMUM FRONT YARD SHALL BE INCREASED TO 80 FT ALONG PAXTON STREET.

[3] LOT AREA SHALL BE ADJUSTED PER NATURAL FEATURE REGULATIONS IN SECTIONS 295-30 AND 295-32.

[4] THE MINIMUM REAR YARD TO BE INCREASED TO 60 FT ALONG PAXTON STREET, AS MEASURED FROM THE CENTERLINE.

[5] REVISED ZONING CRITERIA PER ORDINANCE NO. 2023-01

10. NUMBER OF PRINCIPAL USES AND PRINCIPAL BUILDINGS PER LOT (§ 295-121)
    A. A LOT IN A COMMERCIAL OR INDUSTRIAL DISTRICT MAY INCLUDE MORE THAN ONE PERMITTED PRINCIPAL USE PER LOT AND/OR MORE THAN ONE PERMITTED PRINCIPAL BUILDING PER LOT, PROVIDED THAT ALL OF THE REQUIREMENTS ARE MET FOR EACH USE AND EACH BUILDING. IF DIFFERING DIMENSIONAL REQUIREMENTS APPLY FOR DIFFERENT USES ON THE LOT, THEN THE MOST RESTRICTIVE REQUIREMENT SHALL APPLY.
       i. FOR EXAMPLE, IF USE NO. 1 REQUIRES A ONE-ACRE LOT AREA AND USE NO. 2 ON THE SAME LOT REQUIRES A TWO-ACRE LOT AREA, THEN THE LOT SHALL HAVE A MINIMUM LOT AREA OF TWO ACRES.
       ii. THE APPLICANT SHALL SUBMIT A SITE PLAN THAT DEMONSTRATES THAT EACH STRUCTURE WOULD MEET THE REQUIREMENTS OF THIS CHAPTER.
       iii. THE USES AND BUILDINGS SHALL BE IN COMMON OWNERSHIP. HOWEVER, A CONDOMINIUM FORM OF OWNERSHIP OF INDIVIDUAL BUILDINGS, WITH A LEGALLY BINDING PROPERTY OWNER ASSOCIATION, MAY BE ESTABLISHED IF THE APPLICANT PROVES, TO THE SATISFACTION OF THE ZONING OFFICER, BASED UPON REVIEW BY THE TOWNSHIP SOLICITOR, THAT THERE WILL BE APPROPRIATE LEGAL MECHANISMS IN PLACE.

11. AUTO SERVICE STATION (§ 295-49)
    A. SEE DEFINITION OF THIS TERM AND "AUTO REPAIR GARAGE" IN ARTICLE II. THE USES MAY BE COMBINED, IF THE REQUIREMENTS FOR EACH ARE MET. **(NOT APPLICABLE)**
    B. ALL ACTIVITIES, EXCEPT THOSE TO BE PERFORMED AT THE FUEL OR AIR PUMPS, SHALL BE PERFORMED WITHIN A BUILDING. THE USE SHALL NOT INCLUDE SPRAY PAINTING. **(COMPLIES)**
    C. FUEL PUMPS SHALL BE AT LEAST 25 FEET FROM THE EXISTING STREET RIGHT-OF-WAY AND ANY LOT LINE AND SHALL MEET SIDE YARD PRINCIPAL BUILDING SETBACK REQUIREMENTS. **(COMPLIES)**
    D. OVERNIGHT OUTDOOR STORAGE OF JUNK SHALL BE PROHIBITED WITHIN VIEW OF A PUBLIC STREET OR DWELLING. ANY JUNK VEHICLE STORED OUTSIDE OVERNIGHT SHALL BE SCREENED FROM VIEW OF ADJACENT DWELLINGS. **(COMPLIES)**
    E. ANY JUNK VEHICLE (AS DEFINED BY ARTICLE II) SHALL NOT BE STORED MORE THAN 20 DAYS WITHIN VIEW OF A PUBLIC STREET OR A DWELLING. NO JUNK VEHICLES SHALL BE STORED WITHIN 20 FEET OF AN EXISTING STREET RIGHT-OF-WAY. NO MORE THAN SIX JUNK VEHICLES SHALL BE STORED ON THE LOT OUTSIDE OF AN ENCLOSED BUILDING AT ANY POINT IN TIME. **(NOT APPLICABLE)**
    F. THE USE MAY INCLUDE A CONVENIENCE STORE IF THE REQUIREMENTS FOR SUCH USE ARE ALSO MET AND IF GASOLINE SALES ARE SPECIFICALLY ALLOWED IN THAT DISTRICT UNDER § 295-27. **(NOT APPLICABLE)**
    G. A CANOPY MAY BE ATTACHED TO THE PRINCIPAL BUILDING. THE CANOPY SHALL NOT INCLUDE ANY SIGNS, EXCEPT FOR THE FOLLOWING: **(NOT APPLICABLE - CANOPY NOT ATTACHED TO STRUCTURE)**
       i. A SIGN MAY BE ATTACHED TO EACH OF TWO SIDES OF THE CANOPY IN PLACE OF AN ALLOWED FREESTANDING SIGN;
       ii. AN ALLOWED WALL SIGN MAY BE PLACED ON A PORTION OF THE CANOPY THAT IS BEHIND THE MINIMUM FRONT YARD SETBACK LINE; AND
       iii. NECESSARY WARNING SIGNS.
    H. FUEL TANKS AND DISPENSERS AND VENTILATION EQUIPMENT SHALL BE SET BACK A MINIMUM OF 100 FEET FROM THE LOT LINE OF ANY RESIDENTIAL OR INSTITUTIONAL USE (SUCH AS A SCHOOL OR NURSING HOME). **(COMPLIES)**

12. PARKING REQUIREMENTS (§ 295-106)
    A. BACKING ONTO A STREET. NO PARKING AREA SHALL BE DESIGNED TO REQUIRE OR ENCOURAGE PARKED VEHICLES TO BACK INTO A PUBLIC STREET IN ORDER TO LEAVE A PARKING SPACE, EXCEPT FOR A DRIVEWAY SERVING ONE DWELLING OR A DRIVEWAY THAT ENTERS ONTO A LOCAL STREET OR PARKING COURT. PARKING SPACES MAY BACK ONTO AN ALLEY. **(COMPLIES)**
    B. EVERY REQUIRED PARKING SPACE SHALL BE DESIGNED SO THAT EACH MOTOR VEHICLE MAY PROCEED TO AND FROM THE PARKING SPACE PROVIDED FOR IT WITHOUT REQUIRING THE MOVING OF ANY OTHER VEHICLE, UNLESS SPECIFICALLY PERMITTED OTHERWISE. **(COMPLIES)**
    C. PARKING AREAS SHALL NOT BE WITHIN A REQUIRED BUFFER YARD OR STREET RIGHT-OF-WAY.
    D. SEPARATION FROM STREET. EXCEPT FOR PARKING SPACES IMMEDIATELY IN FRONT OF INDIVIDUAL DWELLINGS, ALL AREAS FOR OFF-STREET PARKING, OFF-STREET LOADING AND UNLOADING AND THE STORAGE OR MOVEMENT OF MOTOR VEHICLES SHALL BE PHYSICALLY SEPARATED FROM THE STREET BY A CONTINUOUS GRASS OR LANDSCAPED PLANTING STRIP, EXCEPT FOR NECESSARY AND APPROVED VEHICLE ENTRANCES AND EXITS TO THE LOT. **(COMPLIES)**
    E. STACKING AND OBSTRUCTIONS. EACH LOT SHALL PROVIDE ADEQUATE AREA UPON THE LOT TO PREVENT BACKUP OF VEHICLES ON A PUBLIC STREET WHILE AWAITING ENTRY TO THE LOT OR WHILE WAITING FOR SERVICE AT A DRIVE-THROUGH FACILITY. **(COMPLIES)**
    F. EACH PARKING SPACE SHALL BE A RECTANGLE WITH A MINIMUM WIDTH OF NINE FEET AND A MINIMUM LENGTH OF 18 FEET, EXCEPT THE MINIMUM SIZED RECTANGLE SHALL BE EIGHT FEET BY 22 FEET FOR PARALLEL PARKING, AND EXCEPT WHERE A LARGER SPACE IS REQUIRED BY SUBSECTION C. **(COMPLIES)**
    G. THE MINIMUM AISLE WIDTH FOR TWO-WAY TRAFFIC AND 90-DEGREE PARKING SPACES IS 24 FEET. **(COMPLIES)**
    H. PARKING CALCULATION (§ 295-104):

       AUTO SERVICE STATION:
       (5 SPACES PER REPAIR/SERVICE BAY X 0 BAYS) = 0 SPACES
       (1/4 SPACES PER FUEL NOZZLE X 16 FUEL NOZZLES) = 4 SPACES
       PARKING NEEDED FOR CONVENIENCE STORE

       CONVENIENCE STORE (RETAIL SALES):
       (1 SPACE PER 200 SF OF FLOOR AREA OF ROOMS ACCESSIBLE TO CUSTOMERS X 5,585 SF FLOOR AREA) = 28 SPACES
       (1 SPACE PER 1.5 EMPLOYEES X 12 EMPLOYEES) = 8 SPACES
       TOTAL REQUIRED = 40 SPACES
       TOTAL PROPOSED = 56 SPACES **(COMPLIES)**

13. LOADING REQUIREMENTS (§ 295-107):
    A. EACH USE SHALL PROVIDE OFF-STREET LOADING FACILITIES, WHICH MEET THE REQUIREMENTS OF THIS SECTION, SUFFICIENT TO ACCOMMODATE THE MAXIMUM DEMAND GENERATED BY THE USE AND THE MAXIMUM SIZE VEHICLE, IN A MANNER THAT WILL NOT ROUTINELY OBSTRUCT TRAFFIC ON A PUBLIC STREET AND TRAFFIC ENTERING AND EXITING THE LOT. IF NO OTHER REASONABLE ALTERNATIVE IS FEASIBLE, TRAFFIC MAY BE OBSTRUCTED FOR OCCASIONAL LOADING AND UNLOADING ALONG AN ALLEY, PROVIDED TRAFFIC HAS THE ABILITY TO USE ANOTHER METHOD OF ACCESS. **(COMPLIES)**
    B. AT THE TIME OF REVIEW UNDER THIS CHAPTER, THE APPLICANT SHALL PROVIDE EVIDENCE TO THE ZONING OFFICER ON WHETHER THE USE WILL HAVE SUFFICIENT NUMBERS AND SIZES OF LOADING FACILITIES. THE PLANNING COMMISSION AND/OR TOWNSHIP COMMISSIONERS MAY PROVIDE ADVICE TO THE ZONING OFFICER ON THIS MATTER AS PART OF ANY PLAN REVIEW BY SUCH BOARDS. FOR THE PURPOSES OF THIS SECTION, THE WORDS "LOADING" AND "UNLOADING" ARE USED INTERCHANGEABLY.
    C. EACH SPACE AND THE NEEDED MANEUVERING ROOM SHALL NOT INTRUDE INTO APPROVED BUFFER AREAS AND LANDSCAPED AREAS. **(COMPLIES)**

14. DRIVEWAY REQUIREMENTS (§ 295-106)
    A. THE MINIMUM DRIVEWAY WIDTH, AS MEASURED AT THE RIGHT-OF-WAY LINE, FOR TWO-WAY USE IS 22 FEET. **(COMPLIES)**
    B. THE MAXIMUM DRIVEWAY WIDTH, AS MEASURED AT THE RIGHT-OF-WAY LINE, FOR TWO-WAY USE IS 30 FEET. **(COMPLIES)**
    C. THIS STANDARD MAY BE REVISED WHERE THE STATE DEPARTMENT OF TRANSPORTATION REQUIRES A DIFFERENT STANDARD FOR AN ENTRANCE TO A STATE ROAD, OR WHERE THE APPLICANT DEMONSTRATES TO THE ZONING OFFICER THAT A WIDER WIDTH IS NEEDED FOR TRUCK OR BUS ACCESS.
    D. ANY NEW OR EXPANDED VEHICLE PARKING OR VEHICLE STORAGE AREA SERVING A PRINCIPAL NONRESIDENTIAL USE SHALL BE SEPARATED FROM A PUBLIC STREET BY A PLANTING STRIP. THE PLANTING STRIP SHALL HAVE A MINIMUM WIDTH OF 10 FEET AND BE MAINTAINED IN GRASS OR OTHER ATTRACTIVE VEGETATIVE GROUND COVER. THE PLANTING STRIP MAY BE ON ONE OR BOTH SIDES OF ANY SIDEWALK, PROVIDED THE PLANTING WIDTH TOTALS 10 FEET. THIS TEN-FOOT WIDTH SHALL BE INCREASED TO 25 FEET FOR A LOT INCLUDING 100 OR MORE PARKING SPACES. **(EXISTING NON-CONFORMANCE - 5.9 FEET TO PAXTON STREET AND 3.8 FEET TO BRIDGE ROAD)**

15. BUFFER REQUIREMENTS (§ 295-123.D)
    A. A MINIMUM THIRTY-FOOT-WIDE BUFFER YARD WITH PLANT SCREENING SHALL BE REQUIRED ALONG THE REAR AND SIDE LOT LINES OF ANY LOT USED PRINCIPALLY FOR PRINCIPAL NONRESIDENTIAL PURPOSES THAT IS CONTIGUOUS TO A LOT OCCUPIED BY AN EXISTING PRINCIPAL DWELLING OR AN UNDEVELOPED RESIDENTIALLY ZONED LOT. **(NOT APPLICABLE - NO SIDE OR REAR YARD ADJACENT TO RESIDENTIAL OR RESIDENTIAL DISTRICTS)**
       i. IF A PRINCIPAL BUSINESS USE WILL INCLUDE AREAS USED FOR MANUFACTURING OR WILL HAVE A LOADING DOCK THAT WILL BE ROUTINELY SERVICED BY TRACTOR-TRAILER TRUCKS OR REFRIGERATED TRUCKS, THEN THE MINIMUM BUFFER YARD WIDTH ALONG SUCH MANUFACTURING AREA AND/OR LOADING DOCK SHALL BE INCREASED TO 70 FEET, AND THE MINIMUM INITIAL HEIGHT OF PLANTINGS SHALL BE INCREASED TO EIGHT FEET.
       ii. IF A LOT WILL INCLUDE MORE THAN 100,000 SQUARE FEET OF BUSINESS BUILDING FLOOR AREA, THEN THE MINIMUM BUFFER YARD WIDTH SHALL BE INCREASED TO 70 FEET, AND THE MINIMUM INITIAL HEIGHT OF PLANTINGS SHALL BE INCREASED TO EIGHT FEET.
       iii. IF A DWELLING WILL BE ON THE SAME LOT AS A PRINCIPAL BUSINESS USE, THEN A BUFFER YARD SHALL NOT BE REQUIRED BY THIS SECTION.
       iv. A TEN-FOOT MINIMUM BUFFER YARD WITH LANDSCAPED SCREENING SHALL BE REQUIRED WHERE A SUBDIVISION OR LAND DEVELOPMENT OF NEW DWELLINGS WILL HAVE REAR YARDS ABUTTING A PUBLIC STREET OR EXPRESSWAY.
       v. A BUFFER YARD IS ALSO REQUIRED TO BE PROVIDED BY THE FOLLOWING IF THEY ARE ABUTTING AND VISIBLE FROM A PUBLIC STREET:
          (1) ALONG LOT LINES OF ANY NEWLY DEVELOPED OR EXPANDED OUTDOOR INDUSTRIAL STORAGE OR LOADING AREA; OR
          (2) ALONG LOT LINES OF ANY NEWLY DEVELOPED OR EXPANDED AREA ROUTINELY USED FOR THE OVERNIGHT PARKING OF TWO OR MORE TRACTOR-TRAILER TRUCKS OR TRAILERS OF TRACTOR-TRAILERS.
       vi. A LANDSCAPED BERM MAY BE INCORPORATED INTO A BUFFER YARD. IN SUCH CASE, THE SIDE ADJACENT TO A BUSINESS MAY BE A RETAINING WALL.
    B. A REQUIRED YARD MAY OVERLAP A REQUIRED BUFFER YARD, PROVIDED THE REQUIREMENT FOR EACH IS MET. THE BUFFER YARD SHALL BE MEASURED FROM THE DISTRICT BOUNDARY LINE, STREET RIGHT-OF-WAY LINE OR LOT LINE, WHICHEVER IS APPLICABLE. REQUIRED PLANTINGS SHALL NOT BE PLACED WITHIN THE RIGHT-OF-WAY, EXCEPT THAT THE TOWNSHIP MAY ALLOW DECIDUOUS CANOPY TREES.
    C. THE BUFFER YARD SHALL BE A LANDSCAPED AREA FREE OF STRUCTURES, DUMPSTERS, COMMERCIAL OR INDUSTRIAL STORAGE, OR DISPLAY, SIGNS, MANUFACTURING OR PROCESSING ACTIVITY, MATERIALS, LOADING AND UNLOADING AREAS, OR VEHICLE PARKING OR DISPLAY.
    D. ANY WALL OR FENCE IN A BUFFER YARD SHALL BE PLACED ON THE INSIDE (NONRESIDENTIAL SIDE) OF ANY REQUIRED PLANT SCREENING.

16. STEEP SLOPES (§ 295-32) **(NOT APPLICABLE - NO STEEP SLOPES)**
    A. REGRADING. THE REGULATIONS FOR NON-MAN-MADE SLOPES OF OVER 15% SHALL APPLY BASED UPON SLOPES THAT EXISTED AS OF THE EFFECTIVE DATE OF THIS CHAPTER. THIS SECTION SHALL NOT REGULATE SLOPES THAT WERE CLEARLY MAN-MADE PRIOR TO THE ADOPTION OF THIS CHAPTER.
    B. SLOPES OVER 25%. A NEW PRINCIPAL BUILDING SHALL NOT BE LOCATED ON A SLOPE GREATER THAN 25%.
    C. SINGLE-FAMILY DWELLINGS AND STEEP SLOPES. THE FOLLOWING PROVISIONS SHALL ONLY APPLY TO ANY LOT THAT IS SUBMITTED FOR PRELIMINARY SUBDIVISION APPROVAL AFTER THE EFFECTIVE DATE OF THIS SECTION, OR WHICH IS SUBMITTED FOR FINAL SUBDIVISION APPROVAL IF A PRELIMINARY PLAN SUBMITTAL WAS NOT REQUIRED, IF THE LOT CONTAINS AREAS WITH SLOPES OF 15% OR GREATER THAT MAY BE DISTURBED:
       i. ANY LOT PROPOSED TO BE USED FOR A SINGLE-FAMILY DETACHED DWELLING SHALL INCLUDE A PROPOSED BUILDING AREA WITH A MINIMUM OF 3,000 SQUARE FEET OF LAND AREA. SUCH BUILDING AREA SHALL NOT INCLUDE LAND AREA RESTRICTED BY THE MINIMUM YARD AREAS, UNLESS A MINIMUM LOT SIZE OF 6,000 SQUARE FEET OR LESS APPLIES. SUCH BUILDING AREA SHALL CONTAIN THE PROPOSED LOCATION OF THE DWELLING. THE DWELLING SHALL BE BUILT WITHIN THE PROPOSED BUILDING AREA SHOWN ON THE PLAN, EXCEPT AS MAY BE APPROVED UNDER SUBSECTION F.
       ii. IF SUCH BUILDING AREA FOR EACH LOT INCLUDES AN AVERAGE SLOPE OF GREATER THAN 15%, THEN THE MINIMUM LOT AREA SHALL BE ONE ACRE, UNLESS A LARGER LOT AREA IS REQUIRED BY ANOTHER SECTION OF THIS CHAPTER.
       iii. THROUGH DESIGNATIONS ON THE TOWNSHIP-APPROVED SITE PLAN, AN APPLICANT MAY LIMIT THE AREA UPON WHICH NEW PRINCIPAL BUILDINGS ARE PERMITTED. BY COMMITTING TO NOT PLACE A PRINCIPAL BUILDING ON SLOPES OVER 15%, THE APPLICANT CAN AVOID THE LARGER LOT SIZE REQUIREMENT OF THIS SUBSECTION.
       iv. IF THE TOTAL OF ALL AREAS ON A TRACT OF 15% OR GREATER SLOPE THAT ARE PROPOSED TO BE DISTURBED INVOLVE LESS THAN 500 SQUARE FEET, THEN THE REQUIREMENTS OF THIS SUBSECTION D SHALL NOT APPLY.
       v. ACCESS. EACH LOT SHALL BE ACCESSIBLE FROM AN EXISTING OR PROPOSED STREET BY MEANS OF A DRIVEWAY WITH A MAXIMUM GRADE OF 15%. THE TOWNSHIP MAY REQUIRE SUBMISSION OF A GRADING, STORMWATER AND EROSION CONTROL PLAN WHERE NECESSARY TO MANAGE DRIVEWAY CONSTRUCTION ON STEEP SLOPES.
    D. STEEP SLOPES AND OTHER USES. A LOT SHALL ONLY BE USED FOR A BUILDING FOR PRINCIPAL USES OTHER THAN SINGLE-FAMILY DETACHED DWELLINGS IF THE PROPOSED BUILDING AREA INCLUDES AN AVERAGE SLOPE OF LESS THAN 15%.
       i. FOR SUCH USES, THE BUILDING AREA SHALL INCLUDE LOCATIONS OF ALL PROPOSED BUILDINGS AND PARKING AREAS AND OUTDOOR STORAGE AREAS AND AN AREA OF 20 FEET AROUND BUILDINGS, PARKING AND STORAGE AREAS. SUCH BUILDING AREA SHALL ALSO CONTAIN THE PROPOSED LOCATIONS OF ANY PRIMARY AND ALTERNATE ON-LOT SEPTIC SYSTEMS.
       ii. ACCESS. EACH PRINCIPAL BUILDING AND EACH PARKING AREA SHALL HAVE VEHICLE ACCESS FROM AN EXISTING OR PROPOSED STREET BY MEANS OF A DRIVEWAY WITH A MAXIMUM GRADE OF 10%.
    E. CHANGES TO BUILDING AREA. THE BUILDING AREA MAY SHOW THE OUTER EXTENT OF AREAS BEING CONSIDERED FOR A PROPOSED BUILDING, WITHOUT SHOWING AN EXACT LOCATION, PROVIDED ALL OF THOSE POTENTIAL AREAS STILL MEET THE REQUIREMENTS OF THIS SECTION. AN APPLICANT MAY CHANGE THE PROPOSED BUILDING AREA AFTER SUBDIVISION APPROVAL IS GRANTED, PROVIDED THAT THE APPLICANT PROVES THAT THE NEW BUILDING AREA WILL STILL COMPLY WITH THIS SECTION. HOWEVER, THE BUILDING AREA SHALL NOT BE SO LARGE AS TO ATTEMPT TO CIRCUMVENT THE AVERAGE SLOPE PROVISIONS OF THIS SECTION THAT APPLY TO A BUILDING SITE.
    F. SITE PLAN AND TREE PROTECTION. IF AN APPLICANT PROPOSES TO ALTER OR BUILD UPON SLOPES OF 15% OR GREATER, THEN A SITE PLAN SHALL BE SUBMITTED TO THE ZONING OFFICER. A SEPARATE SITE PLAN IS NOT REQUIRED IF THE SAME INFORMATION WAS INCLUDED IN AN APPROVED SUBDIVISION OR LAND DEVELOPMENT PLAN.

17. DEVELOPMENT ALONG STREAMS AND WETLANDS (§ 295-36) **(NOT APPLICABLE - NO STREAMS OR WETLANDS WITHIN REGULATED DISTANCES OF PROPERTY)**
    A. A. PERMITS OR APPROVALS MAY BE REQUIRED FOR ACTIVITY WITHIN OR ADJACENT TO A WATERWAY FROM THE STATE DEPARTMENT OF ENVIRONMENTAL PROTECTION, THE ARMY CORPS OF ENGINEERS, THE FEDERAL EMERGENCY MANAGEMENT AGENCY OR OTHER ENTITIES.
    B. B. ANY STREET, DRIVEWAY OR UTILITY CROSSING OF A STREAM SHALL BE APPROXIMATELY PERPENDICULAR TO THE STREAM, TO THE MAXIMUM EXTENT FEASIBLE. AS PART OF ANY STREET, DRIVEWAY OR UTILITY CONSTRUCTION WITHIN OR ADJACENT TO A STREAM, THE APPLICANT SHALL COMPLETE REMEDIAL MEASURES TO MITIGATE THE IMPACT UPON THE STREAM, INCLUDING PLANTING OF TREES AND THICK LOWER-LEVEL VEGETATION AND USE OF BEST MANAGEMENT PRACTICES.
    C. C. ALL AREAS WITHIN 50 FEET FROM THE TOP OF THE PRIMARY BANK OF A PERENNIAL CREEK OR NATURAL LAKE OR POND SHALL NOT BE OCCUPIED BY ANY OF THE FOLLOWING: A BUILDING, VEHICLE PARKING, OR BUSINESS OUTDOOR STORAGE. THIS WIDTH SHALL BE INCREASED TO 75 FEET ALONG THE SUSQUEHANNA RIVER, INCLUDING ON ISLANDS.
    D. D. VEGETATION. WHERE EXISTING TREES AND/OR SHRUBS ARE REMOVED FROM LANDS THAT ARE LESS THAN 50 FEET FROM THE TOP OF THE PRIMARY BANK OF A RIVER OR CREEK OR NATURAL LAKE OR POND, AS PART OF, OR IN PREPARATION TO, A SUBDIVISION, LAND DEVELOPMENT OR PERMITTED CONSTRUCTION OF A NEW BUILDING, THEN NEW TREES AND SHRUBS SHALL BE PLANTED AND MAINTAINED. THE NEW TREES AND SHRUBS SHALL HAVE THE SAME OR BETTER IMPACT UPON CONTROLLING EROSION AND FILTERING POLLUTANTS FROM RUNOFF AS THE TREES AND/OR SHRUBS THAT WERE REMOVED.
    E. (1) DURING THE TIME PERIOD OF ANY MAINTENANCE AGREEMENT WITH THE DEVELOPER, THE DEVELOPER SHALL REPLACE, WITHIN 120 DAYS, ANY SUCH TREES OR PLANTS THAT DO NOT SURVIVE. IF SUCH TREES AND PLANTS DO NOT SURVIVE BEYOND THE MAINTENANCE AGREEMENT TIME PERIOD, THEY SHALL BE REPLACED, WITHIN 120 DAYS AFTERWARDS, BY THE CURRENT OWNER OF THE PROPERTY.

18. ACCESSORY USES (§ 295-96)
    A. FRONT YARD SETBACK. NO ACCESSORY STRUCTURE, USE OR BUILDING SHALL BE PERMITTED IN A REQUIRED FRONT YARD IN ANY DISTRICT, UNLESS SPECIFICALLY PERMITTED BY THIS CHAPTER. **(COMPLIES)**
    B. FENCES AND WALLS ARE PERMITTED BY RIGHT IN ALL DISTRICTS. ANY FENCE OR WALL SHALL BE DURABLY CONSTRUCTED AND WELL-MAINTAINED. FENCES THAT HAVE DETERIORATED SHALL BE REPLACED OR REMOVED. A FENCE SHALL NOT BE REQUIRED TO COMPLY WITH MINIMUM SETBACKS FOR ACCESSORY STRUCTURES.
    C. NO FENCE, WALL OR HEDGE SHALL OBSTRUCT THE SIGHT DISTANCE AS REQUIRED BY § 295-123C AND/OR CHAPTER 253, SUBDIVISION AND LAND DEVELOPMENT. (NOTE: THE SIGHT DISTANCE PROVISIONS TYPICALLY REGULATE FEATURES OVER THREE FEET IN HEIGHT.) **(COMPLIES)**
    D. FENCES **(COMPLIES)**
       i. FRONT YARD. ANY FENCE LOCATED IN THE REQUIRED MINIMUM FRONT YARD OF A LOT IN A RESIDENTIAL DISTRICT SHALL NOT EXCEED FOUR FEET IN HEIGHT. A TALLER HEIGHT MAY BE APPROVED BY THE ZONING OFFICER IF NECESSARY TO CONTAIN ANIMALS OR TO ADDRESS A SPECIFIC HAZARD, SUCH AS AN ELECTRIC TRANSFORMER.
       ii. ON A CORNER LOT, A FENCE OR WALL SHALL MEET THE SAME REQUIREMENTS ALONG BOTH STREETS AS WOULD APPLY WITHIN A MINIMUM FRONT YARD. HOWEVER, A FENCE THAT ONLY EXTENDS BEHIND THE REAR OF A DWELLING MAY HAVE A MAXIMUM HEIGHT OF 6.5 FEET ALONG ONE OF THE STREETS, OTHER THAN THE STREET THAT IS ALONG THE FRONT OF THE DWELLING.
       iii. HEIGHT.
          (1) A FENCE LOCATED IN A RESIDENTIAL DISTRICT IN A LOCATION OTHER THAN A REQUIRED FRONT YARD SHALL HAVE A MAXIMUM HEIGHT OF 6.5 FEET, EXCEPT A MAXIMUM HEIGHT OF 10 FEET SHALL BE ALLOWED AROUND A TENNIS COURT (PROVIDED IT IS OUTSIDE OF THE MINIMUM FRONT YARD), AND A TALLER HEIGHT MAY BE ALLOWED WHERE THE APPLICANT PROVES TO THE ZONING OFFICER THAT SUCH TALLER HEIGHT IS NECESSARY TO PROTECT PUBLIC SAFETY AROUND A SPECIFIC HAZARD.
          (2) A FENCE IN THE MINIMUM FRONT YARD THAT IS NOT WITHIN A RESIDENTIAL DISTRICT SHALL HAVE A MAXIMUM HEIGHT OF FOUR FEET.
       iv. SETBACKS. NO FENCE SHALL BE BUILT WITHIN AN EXISTING STREET RIGHT-OF-WAY. A FENCE MAY BE CONSTRUCTED WITHOUT A SETBACK FROM A LOT LINE, EXCEPT THAT A FENCE SHALL BE LOCATED ON THE INSIDE OF ANY BUFFER PLANTINGS REQUIRED BY § 295-123, AND EXCEPT THAT A FIVE-FOOT MINIMUM SETBACK SHALL APPLY FOR A FENCE OF A PRINCIPAL BUSINESS THAT IS MORE THAN SIX FEET IN HEIGHT AND THAT IS ADJACENT TO A PRINCIPAL DWELLING. WHERE NO SETBACK IS REQUIRED, A ONE-FOOT OR GREATER SETBACK IS RECOMMENDED TO PROVIDE FOR FUTURE MAINTENANCE OF THE FENCE AND TO ACCOUNT FOR POSSIBLE INACCURATE LOT LINES.
       v. FENCE MATERIALS. BARBED WIRE SHALL NOT BE USED AS PART OF FENCES AROUND DWELLINGS IN RESIDENTIAL DISTRICTS. ELECTRICALLY CHARGED FENCES SHALL ONLY BE USED TO CONTAIN FARM ANIMALS AND SHALL BE OF SUCH LOW INTENSITY THAT THEY WILL NOT PERMANENTLY INJURE HUMANS. NO FENCE OR WALL SHALL BE CONSTRUCTED OUT OF FABRIC, JUNK, JUNK VEHICLES, APPLIANCES, DRUMS, OR BARRELS.
    E. WALLS.
       i. ENGINEERED RETAINING WALLS NECESSARY TO HOLD BACK SLOPES ARE EXEMPTED FROM SETBACK REGULATIONS AND THE REGULATIONS OF THIS SECTION AND ARE PERMITTED BY RIGHT AS NEEDED IN ALL DISTRICTS. HOWEVER, IF A RETAINING WALL IS OVER EIGHT FEET IN HEIGHT, IT SHALL BE SET BACK A MINIMUM OF 15 FEET FROM A LOT LINE OF AN EXISTING DWELLING. **(COMPLIES)**
       ii. NO WALL OF GREATER THAN THREE FEET SHALL BE LOCATED IN THE REQUIRED FRONT YARD IN A RESIDENTIAL DISTRICT, EXCEPT AS A BACKING FOR A PERMITTED SIGN AS PERMITTED IN § 295-112. **(COMPLIES)**
       iii. A WALL IN A RESIDENTIAL DISTRICT OUTSIDE OF A REQUIRED FRONT YARD SHALL HAVE A MAXIMUM HEIGHT OF THREE FEET IF IT IS WITHIN THE MINIMUM ACCESSORY STRUCTURE SETBACK. **(COMPLIES)**

19. PRIOR TO STARTING CONSTRUCTION, THE CONTRACTOR SHALL BE RESPONSIBLE TO MAKE SURE THAT ALL REQUIRED PERMITS AND APPROVALS HAVE BEEN OBTAINED. NO CONSTRUCTION OR FABRICATION SHALL BEGIN UNTIL THE CONTRACTOR HAS RECEIVED AND THOROUGHLY REVIEWED ALL PLANS AND OTHER DOCUMENTS BY ALL OF THE PERMITTING AUTHORITIES.
20. ALL WORK SHALL BE PERFORMED IN ACCORDANCE WITH THESE PLANS AND SPECIFICATIONS AND THE REQUIREMENTS AND STANDARDS OF THE LOCAL GOVERNING AUTHORITY.
21. THE SOILS REPORT AND RECOMMENDATIONS SET FORTH THEREIN ARE A PART OF THE REQUIRED CONSTRUCTION DOCUMENTS AND IN CASE OF CONFLICT SHALL TAKE PRECEDENCE UNLESS SPECIFICALLY NOTED OTHERWISE ON THE PLANS. THE CONTRACTOR SHALL NOTIFY THE ENGINEER CONSTRUCTION MANAGER OF ANY DISCREPANCY BETWEEN SOILS REPORT & PLANS,
22. SITE CLEARING SHALL INCLUDE THE LOCATION AND REMOVAL OF ALL UNDERGROUND TANKS, PIPES, VALVES, ETC.
23. THE PROPERTY SURVEY SHALL BE CONSIDERED A PART OF THESE PLANS.
24. ALL DIMENSIONS SHOWN ON THE PLANS SHALL BE FIELD VERIFIED BY THE CONTRACTOR PRIOR TO CONSTRUCTION. CONTRACTOR SHALL NOTIFY ENGINEER IF ANY DISCREPANCIES EXIST PRIOR TO PROCEEDING WITH CONSTRUCTION FOR NECESSARY PLAN CHANGES. NO EXTRA COMPENSATION SHALL BE PAID TO THE CONTRACTOR FOR WORK HAVING TO BE REDONE DUE TO DIMENSIONS OR GRADES SHOWN INCORRECTLY ON THESE PLANS IF SUCH NOTIFICATION HAS NOT BEEN GIVEN.
25. SOLID WASTE TO BE DISPOSED OF BY CONTRACTOR IN ACCORDANCE WITH ALL LOCAL, STATE AND FEDERAL REGULATIONS.
26. ALL EXCAVATED UNSUITABLE MATERIAL MUST BE TRANSPORTED TO AN APPROVED DISPOSAL LOCATION.
27. CONTRACTOR IS RESPONSIBLE FOR ALL SHORING REQUIRED DURING EXCAVATION AND SHALL BE PERFORMED IN ACCORDANCE WITH CURRENT OSHA STANDARDS, AS WELL AS ADDITIONAL PROVISIONS TO ASSURE STABILITY OF CONTIGUOUS STRUCTURES, AS FIELD CONDITIONS DICTATE.
28. ALL CONTRACTORS MUST CARRY STATUTORY WORKERS COMPENSATION, EMPLOYERS LIABILITY INSURANCE AND APPROPRIATE LIMITS OF COMMERCIAL GENERAL LIABILITY INSURANCE (CGL). ALL CONTRACTORS MUST HAVE THEIR CGL POLICIES ENDORSED TO NAME DYNAMIC ENGINEERING CONSULTANTS, P.C. , ITS SUBCONSULTANTS AS ADDITIONAL INSURED AND TO PROVIDE CONTRACTUAL LIABILITY COVERAGE SUFFICIENT TO INSURE THE HOLD HARMLESS AND INDEMNITY OBLIGATIONS ASSUMED BY THE CONTRACTORS. ALL CONTRACTORS MUST FURNISH DYNAMIC ENGINEERING CONSULTANTS, P.C. WITH CERTIFICATES OF INSURANCE AS EVIDENCE OF THE REQUIRED INSURANCE PRIOR TO COMMENCING WORK AND UPON RENEWAL OF EACH POLICY DURING THE ENTIRE PERIOD OF CONSTRUCTION. IN ADDITION, ALL CONTRACTORS WILL, TO THE FULLEST EXTENT PERMITTED BY LAW, INDEMNIFY AND HOLD HARMLESS DYNAMIC ENGINEERING CONSULTANTS, P.C. AND ITS SUBCONSULTANTS FROM AND AGAINST ANY DAMAGES, LIABILITIES OR COSTS, INCLUDING REASONABLE ATTORNEYS' FEES AND DEFENSE COSTS, ARISING OUT OF OR IN ANY WAY CONNECTED WITH THE PROJECT, INCLUDING ALL CLAIMS BY EMPLOYEES OF THE CONTRACTORS.
29. NEITHER THE PROFESSIONAL ACTIVITIES OF DYNAMIC ENGINEERING CONSULTANTS, P.C., NOR THE PRESENCE OF DYNAMIC ENGINEERING CONSULTANTS, P.C. OR ITS EMPLOYEES AND SUBCONSULTANTS AT A CONSTRUCTION/PROJECT SITE, SHALL RELIEVE THE GENERAL CONTRACTOR OF ITS OBLIGATIONS, DUTIES AND RESPONSIBILITIES INCLUDING, BUT NOT LIMITED TO, CONSTRUCTION MEANS, METHODS, SEQUENCE, TECHNIQUES OR PROCEDURES NECESSARY FOR PERFORMING, SUPERINTENDING AND COORDINATING THE WORK IN ACCORDANCE WITH THE CONTRACT DOCUMENTS AND ANY HEALTH OR SAFETY PRECAUTIONS REQUIRED BY ANY REGULATORY AGENCIES. DYNAMIC ENGINEERING CONSULTANTS, P.C. AND ITS PERSONNEL HAVE NO AUTHORITY TO EXERCISE ANY CONTROL OVER ANY CONSTRUCTION CONTRACTOR OR ITS EMPLOYEES IN CONNECTION WITH THEIR WORK OR ANY HEALTH OR SAFETY PROGRAMS OR PROCEDURES. THE GENERAL CONTRACTOR SHALL BE SOLELY RESPONSIBLE FOR JOBSITE SAFETY. DYNAMIC ENGINEERING CONSULTANTS, P.C. SHALL BE INDEMNIFIED BY THE GENERAL CONTRACTOR AND SHALL BE MADE ADDITIONAL INSURED UNDER THE GENERAL CONTRACTOR'S POLICIES OF GENERAL LIABILITY INSURANCE.
30. DYNAMIC ENGINEERING CONSULTANTS, P.C. SHALL REVIEW AND APPROVE OR TAKE OTHER APPROPRIATE ACTION ON THE CONTRACTOR SUBMITTALS, SUCH AS SHOP DRAWINGS, PRODUCT DATA, SAMPLES AND OTHER DATA, WHICH THE CONTRACTOR IS REQUIRED TO SUBMIT, BUT ONLY FOR THE LIMITED PURPOSE OF CHECKING FOR CONFORMANCE WITH THE DESIGN CONCEPT AND THE INFORMATION SHOWN IN THE CONSTRUCTION MEANS OR METHODS, COORDINATION OF THE WORK WITH OTHER TRADES OR CONSTRUCTION SAFETY PRECAUTIONS, ALL OF WHICH ARE THE SOLE RESPONSIBILITY OF THE CONTRACTOR. DYNAMIC ENGINEERING'S REVIEW SHALL BE CONDUCTED WITH REASONABLE PROMPTNESS WHILE ALLOWING SUFFICIENT TIME TO PERMIT ADEQUATE REVIEW. REVIEW OF A SPECIFIC ITEM SHALL NOT INDICATE THAT DYNAMIC ENGINEERING CONSULTANTS, P.C. HAS REVIEWED THE ENTIRE ASSEMBLY OF WHICH THE ITEM IS A COMPONENT. DYNAMIC ENGINEERING CONSULTANTS, P.C. SHALL NOT BE RESPONSIBLE FOR ANY DEVIATIONS FROM THE CONSTRUCTION DOCUMENTS NOT BROUGHT TO THE ATTENTION OF DYNAMIC ENGINEERING CONSULTANTS, P.C. IN WRITING BY THE CONTRACTOR. DYNAMIC ENGINEERING CONSULTANTS, P.C. SHALL NOT BE REQUIRED TO REVIEW PARTIAL SUBMISSIONS OR THOSE FOR WHICH SUBMISSIONS OF CORRELATED ITEMS HAVE NOT BEEN RECEIVED.
31. IN AN EFFORT TO RESOLVE ANY CONFLICTS THAT ARISE DURING THE DESIGN AND CONSTRUCTION OF THE PROJECT OR FOLLOWING THE COMPLETION OF THE PROJECT, DYNAMIC ENGINEERING CONSULTANTS, P.C. AND THE CONTRACTOR MUST AGREE THAT ALL DISPUTES BETWEEN THEM ARISING OUT OF OR RELATING TO THIS AGREEMENT OR THE PROJECT SHALL BE SUBMITTED TO NONBINDING MEDIATION UNLESS THE PARTIES MUTUALLY AGREE OTHERWISE.
32. THE CONTRACTOR MUST INCLUDE A MEDIATION PROVISION IN ALL AGREEMENTS WITH INDEPENDENT SUBCONTRACTORS AND CONSULTANTS RETAINED FOR THE PROJECT AND TO REQUIRE ALL INDEPENDENT CONTRACTORS AND CONSULTANTS ALSO TO INCLUDE A SIMILAR MEDIATION PROVISION IN ALL AGREEMENTS WITH THEIR SUBCONTRACTORS, SUBCONSULTANTS, SUPPLIERS AND FABRICATORS, THEREBY PROVIDING FOR MEDIATION AS THE PRIMARY METHOD FOR DISPUTE RESOLUTION BETWEEN THE PARTIES TO ALL THOSE AGREEMENTS.
33. IF THE CONTRACTOR DEVIATES FROM THE PLANS AND SPECIFICATIONS, INCLUDING THE NOTES CONTAINED THEREON, WITHOUT FIRST OBTAINING PRIOR WRITTEN AUTHORIZATION FOR SUCH DEVIATIONS FROM THE OWNER AND ENGINEER, IT SHALL BE RESPONSIBLE FOR THE PAYMENT OF ALL COSTS TO CORRECT ANY WORK DONE, ALL FINES OR PENALTIES ASSESSED WITH RESPECT THERETO AND ALL COMPENSATORY OR PUNITIVE DAMAGES RESULTING THEREFROM AND IT SHALL INDEMNIFY AND HOLD THE OWNER AND ENGINEER HARMLESS FROM ALL SUCH COSTS TO CONNECT ANY SUCH WORK AND FROM ALL SUCH FINES AND PENALTIES, COMPENSATION AND PUNITIVE DAMAGES AND COSTS OF ANY NATURE RESULTING THEREFROM.
34. CONTRACTOR ACKNOWLEDGES HE HAS READ AND UNDERSTOOD THE DESIGN PHASE SOIL PERMEABILITY AND GROUNDWATER TEST RESULTS IN THE STORMWATER MANAGEMENT REPORT AND THAT THE CONTRACTORS RESPONSIBILITIES INCLUDE NECESSARY PROVISIONS TO ACHIEVE THE DESIGN PERMEABILITY IN THE FIELD.
35. CONTRACTOR TO BE ADVISED THAT THE ENGINEER WAS NOT PROVIDED WITH FINAL FLOOR PLAN DRAWINGS FOR THE BUILDING AT THE TIME OF SITE PLAN DESIGN. AS A RESULT, ENTRANCE DOOR LOCATIONS AS DEPICTED HEREON MAY NOT BE FINAL AND MUST BE CONFIRMED WITH THE ARCHITECTURAL PLANS PRIOR TO CONSTRUCTION. THE HANDICAP ACCESSIBLE PARKING SPACES AND THE ASSOCIATED RAMPS AND ACCESSIBLE ROUTE MUST COMPLY WITH ALL APPLICABLE LOCAL, STATE AND FEDERAL REQUIREMENTS AND THE HANDICAP PARKING SPACES MUST BE LOCATED AS THE NEAREST SPACES TO THE ENTRANCE. CONTRACTOR TO NOTIFY OWNER AND ENGINEER IMMEDIATELY OF ANY DISCREPANCY PRIOR TO CONSTRUCTION.
36. CONTRACTOR MUST VERIFY THE LOCATION AND DEPTH OF ALL UNDERGROUND UTILITIES AND FACILITIES PRIOR TO THE START OF CONSTRUCTION AS REQUIRED BY PENNSYLVANIA ACT 172 (FORMER ACT 287). CONTACT PENNSYLVANIA ONE CALL AT (800) 242-1776 PRIOR TO BREAKING GROUND.
37. ALL CONSTRUCTION SHALL BE PERFORMED IN ACCORDANCE WITH SWATARA TOWNSHIP CODES AND SPECIFICATIONS AND PADOT PUBLICATION 408 LATEST REVISION, OR AS LATER AMENDED, UNLESS OTHERWISE NOTED.
38. DRIVEWAY ACCESS TO A STATE HIGHWAY SHALL BE AUTHORIZED ONLY BY THE DEPARTMENT OF TRANSPORTATION AS REQUIRED BY SECTION 410 OF THE ACT OF JUNE 1, 1945 (P.P. 1242 NO. 428) KNOWN AS THE STATE HIGHWAY LAW.
39. ANY WELL FOUND DURING CONSTRUCTION SHALL BE ABANDONED IN ACCORDANCE WITH THE WATER WELL DRILLERS LICENSE ACT AND CURRENT PADEP REQUIREMENTS, SECTION 3.3.5.11 OF THE PADEP "PUBLIC WATER SUPPLY," AND AWWA STANDARD A100-97 ON WATER WELLS.
40. ANY SEWAGE DISPOSAL SYSTEM FOUND DURING CONSTRUCTION SHALL BE ABANDONED IN ACCORDANCE WITH CURRENT PADEP AND DAUPHIN COUNTY HEALTH DEPARTMENT REQUIREMENTS.
41. THE TOWNSHIP ENGINEER AND DAUPHIN COUNTY CONSERVATION DISTRICT SHALL BE NOTIFIED BY THE OWNER OR CONTRACTOR AT LEAST SEVENTY-TWO (72) HOURS IN ADVANCE OF THE COMMENCEMENT OF ANY WORK ON REQUIRED IMPROVEMENTS.

SIGNAGE TABLE

SIGN	REQUIREMENTS		PROPOSED	
FREESTANDING (§259-112)	NUMBER OF SIGNS:	1/STREET FRONTAGE	NUMBER OF SIGNS:	TWO (2)
	MAXIMUM SIGN AREA:	60 SF	SIGN AREA:	58.5 SF
	MAXIMUM SIGN HEIGHT:	30 FT	SIGN HEIGHT:	20 FT
	MAXIMUM SIGN HEIGHT:	45 FT [1]	SIGN HEIGHT:	20 FT
	MINIMUM SIGN SETBACK:	5 FT	SIGN SETBACK:	5 FT
BUILDING MOUNTED (§259-112)	NUMBER OF FACADE SIGNS:	NONE	NUMBER OF SIGNS:	TWO (2)
	MAXIMUM FACADE SIGN AREA:	2 SF/LF OF WALL	SIGN AREA:	
			EAST FACADE:	
		2 SF/85.5 LF = 171 SF	32" SIGN:	36.90 SF
			WEST FACADE:	
		2 SF/85.5 LF = 171 SF	44" SIGN:	67.70 SF
	MAXIMUM HEIGHT:	TO TOP OF ROOF OF WALL TO WHICH ATTACHED	SIGN CLEARANCE:	BELOW PARAPET
	MINIMUM CLEARANCE:	N/S	SIGN CLEARANCE:	15 FT +/-
	MAX. PROJECTION:	N/S	PROJECTION:	5"
DIRECTIONAL (§259-111)	NUMBER OF SIGNS:	NONE	NUMBER OF DIRECTIONAL SIGNS:	NONE
[2]	MAXIMUM SIGN AREA:	3 SF	DIRECTIONAL SIGN AREA:	N/A
	MAXIMUM SIGN HEIGHT:	N/S	SIGN HEIGHT:	N/A
	MINIMUM SIGN SETBACK:	N/S	SIGN SETBACK:	N/A
CANOPY SPANNER (§259-49) [3]	NUMBER OF SIGNS:	EACH OF TWO (2) SIDES OF THE CANOPY	NUMBER OF SIGNS:	TWO (2)
	MAXIMUM AREA:	10 SF	MAXIMUM AREA:	7.84 SF EACH
CANOPY FAÇADE (§259-49) [3]	NUMBER OF SIGNS:	1/STREET FRONTAGE	NUMBER OF SIGNS:	ONE (1)
	MAXIMUM AREA:	10 SF	MAXIMUM AREA:	9.03 SF

N/S: NO STANDARD N/A: NOT APPLICABLE (E): EXISTING NON-CONFORMANCE (V): VARIANCE

SIGN AREA SHALL INCLUDE ALL LETTERING, WORDING AND ACCOMPANYING DESIGNS AND SYMBOLS, TOGETHER WITH RELATED BACKGROUND AREAS ON WHICH THEY ARE DISPLAYED. ONE FREESTANDING SIGN MAY INCLUDE SEVERAL SIGNS THAT ARE ALL ATTACHED TO ONE STRUCTURE, WITH THE TOTAL SIGN AREA BEING THE AREA OF A COMMON GEOMETRIC FORM THAT COULD ENCOMPASS ALL SIGNS.

[1] FREESTANDING SIGN HEIGHT CAN BE INCREASED TO 45 FEET FOR AN ON-PREMISE SIGN PERMITTED TO HAVE A SIGN AREA OF GREATER THAN 100 SF.

[2] ON-SITE DIRECTIONAL SIGNS ARE NOT TO CONTAIN ADVERTISING.

[3] REVISED ZONING CRITERIA PER ORDINANCE NO. 2023-01

DYNAMIC • ENGINEERING • EARTH • SURVEY • TRAFFIC

REV.	DATE	COMMENTS	BY

THIS PLAN SET IS FOR PERMITTING PURPOSES ONLY AND MAY NOT BE USED FOR CONSTRUCTION

DRAWN BY: CMC DESIGNED BY: MS CHECKED BY: MAW CHECKED BY: -

PROJECT: SWATARA PAXTON DEVELOPERS LLC
PROPOSED WAWA FOOD MARKET & FUELING STATION
PARCEL NO. 63-022-037
US ROUTE 322 & BRIDGE ROAD (SR 2018)
TOWNSHIP OF SWATARA, DAUPHIN COUNTY, PENNSYLVANIA

811 Know what's below. Call before you dig.
PROTECT YOURSELF
ALL STATES REQUIRE NOTIFICATION OF EXCAVATORS, DESIGNERS, OR ANY PERSON PREPARING TO DISTURB THE EARTH'S SURFACE ANYWHERE IN ANY STATE
FOR STATE SPECIFIC DIRECT PHONE NUMBERS VISIT: WWW.CALL811.COM

DYNAMIC ENGINEERING
LAND DEVELOPMENT CONSULTING • PERMITTING
GEOTECHNICAL • ENVIRONMENTAL
TRAFFIC • SURVEY • PLANNING & ZONING
826 Newtown Yardley Road
Suite 201, Newtown, PA 18940
T: 267.685.0276 | F: 267.685.0361
Offices conveniently located at:
Lake Como, New Jersey • T: 732.974.0198
Chester, New Jersey • T: 908.879.9229
Marlton, New Jersey • T: 856.334.2000
Newark, New Jersey • T: 973.755.7200
Toms River, New Jersey • T: 732.974.0198
Newtown, Pennsylvania • T: 267.685.0276
Philadelphia, Pennsylvania • T: 215.253.4888
Bethlehem, Pennsylvania • T: 610.598.4400
Allen, Texas • T: 972.534.2100
Houston, Texas • T: 281.789.6400
Austin, Texas • T: 512.646.2646
Delray Beach, Florida • T: 561.921.8570
Annapolis, Maryland • T: 410.567.5000
www.dynamicec.com

JUSTIN A. GEONNOTTI
PROFESSIONAL ENGINEER
PENNSYLVANIA LICENSE No. 080629

MARK A. WHITAKER
PROFESSIONAL ENGINEER
NEW JERSEY LICENSE No. 41417

TITLE: GENERAL NOTES

SCALE: (H) AS (V) SHOWN DATE: 11/21/2023
PROJECT No: 1478-99-212

SHEET No: 3 OF 34 Rev. #: 0

Plotted: 11/22/23 - 12:41 PM, By: ajwright
File: P:\DECPC PROJECTS\1478 Paramount Realty\99-212 Swatara PA\Dwg\Land Dev Plans\D1478992125N0.dwg, ---> 03 GENERAL NOTES

COPYRIGHT © 2023 - DYNAMIC ENGINEERING CONSULTANTS, PC - ALL RIGHTS RESERVED

DEMOLITION NOTES

1. ALL DEMOLITION ACTIVITIES ARE TO BE PERFORMED IN STRICT ADHERENCE TO ALL FEDERAL, STATE AND LOCAL REGULATIONS.
2. PROCEED WITH DEMOLITION IN A SYSTEMATIC MANNER, FROM THE TOP OF THE STRUCTURE(S) TO THE GROUND.
3. COMPLETE DEMOLITION WORK ABOVE EACH FLOOR OR TIER BEFORE DISTURBING ANY OF THE SUPPORTING MEMBERS OF THE LOWER LEVELS.
4. DEMOLISH CONCRETE AND MASONRY IN SMALL SECTIONS.
5. REMOVE STRUCTURAL FRAMING MEMBERS AND LOWER THEM TO THE GROUND.
6. BREAK UP CONCRETE SLABS-ON-GRADE, UNLESS OTHERWISE DIRECTED BY OWNER.
7. LOCATE DEMOLITION EQUIPMENT THROUGHOUT THE STRUCTURE AND REMOVE MATERIALS SO AS TO NOT IMPOSE EXCESSIVE LOADS ON SUPPORTING WALLS, FLOORS, OR FRAMING.
8. PROVIDE INTERIOR AND EXTERIOR SHORING, BRACING AND SUPPORTS TO PREVENT MOVEMENT, SETTLEMENT OR COLLAPSE OF STRUCTURES TO BE DEMOLISHED (AND ADJACENT FACILITIES, IF APPLICABLE).
9. DEMOLISH AND REMOVE ALL FOUNDATION WALLS, FOOTINGS AND OTHER MATERIALS WITHIN THE AREA OF THE DESIGNATED FUTURE BUILDING. ALL OTHER FOUNDATION SYSTEMS, INCLUDING BASEMENTS, SHALL BE DEMOLISHED TO A DEPTH OF NOT LESS THAN ONE FOOT BELOW PROPOSED PAVEMENT OR, BREAK BASEMENT FLOOR SLABS. SEAL ALL OPEN UTILITY LINES WITH CONCRETE. CONTRACTOR TO REVIEW STRUCTURE PRIOR TO DEMOLITION TO DETERMINE IF BASEMENT, CRAWL SPACE OR ANY SUB-STRUCTURE EXISTS. ANY SUB-STRUCTURE, INCLUDING BASEMENTS SHALL BE REMOVED IN ITS ENTIRETY OR AS DIRECTED BY OWNER.
10. ERECT AND MAINTAIN COVERED PASSAGEWAYS IN ORDER TO PROVIDE SAFE PASSAGE FOR PERSONS AROUND THE AREA OF DEMOLITION. CONDUCT ALL DEMOLITION OPERATIONS IN A MANNER THAT WILL PREVENT DAMAGE AND PERSONAL INJURY TO STRUCTURES, ADJACENT BUILDINGS AND ALL PERSONS.
11. REFRAIN FROM USING ANY EXPLOSIVES WITHOUT PRIOR WRITTEN CONSENT OF OWNER AND APPLICABLE GOVERNMENTAL AUTHORITIES.
12. CONDUCT DEMOLITION SERVICES IN SUCH A MANNER TO ENSURE MINIMUM INTERFERENCE WITH ROADS, STREETS, WALKS AND OTHER ADJACENT FACILITIES. DO NOT CLOSE OR OBSTRUCT STREETS, WALKS, OR OTHER OCCUPIED FACILITIES WITHOUT PRIOR WRITTEN PERMISSION OF OWNER AND ANY APPLICABLE GOVERNMENTAL AUTHORITIES. PROVIDE ALTERNATE ROUTES AROUND CLOSED OR OBSTRUCTED TRAFFIC WAYS, IF REQUIRED BY APPLICABLE GOVERNMENTAL REGULATIONS.
13. USE WATERING, TEMPORARY ENCLOSURES AND OTHER SUITABLE METHODS, AS NECESSARY TO LIMIT THE AMOUNT OF DUST AND DIRT RISING AND SCATTERING IN THE AIR. CLEAN ADJACENT STRUCTURES AND IMPROVEMENTS OF ALL DUST AND DEBRIS CAUSED BY THE DEMOLITION OPERATIONS. RETURN ALL ADJACENT AREAS TO THE CONDITIONS EXISTING PRIOR TO THE START OF WORK.
14. ACCOMPLISH AND PERFORM THE DEMOLITION IN SUCH A MANNER AS TO PREVENT THE UNAUTHORIZED ENTRY OF PERSONS AT ANY TIME.
15. COMPLETELY FILL BELOW GRADE AREAS AND VOIDS RESULTING FROM THE DEMOLITION OF STRUCTURES AND FOUNDATIONS WITH SOIL MATERIALS IN ACCORDANCE WITH THE GEOTECHNICAL REPORT, CONSISTING OF STONE, GRAVEL AND SAND, FREE FROM DEBRIS, TRASH, FROZEN MATERIALS, ROOTS AND OTHER ORGANIC MATTER. STONES USED WILL NOT BE LARGER THAN 6 INCHES IN DIMENSION. MATERIAL FROM DEMOLITION MAY NOT BE USED AS FILL. PRIOR TO PLACEMENT OF FILL MATERIALS, UNDERTAKE ALL NECESSARY ACTION IN ORDER TO ENSURE THAT AREAS TO BE FILLED ARE FREE OF STANDING WATER, FROST, FROZEN MATERIAL, TRASH, DEBRIS. PLACE FILL MATERIALS IN HORIZONTAL LAYERS NOT EXCEEDING 6 INCHES IN LOOSE DEPTH AND COMPACT EACH LAYER AT PLACEMENT TO 95% OPTIMUM DENSITY. GRADE THE SURFACE TO MEET ADJACENT CONTOURS AND TO PROVIDE SURFACE DRAINAGE.
16. REMOVE FROM THE DESIGNATED SITE, AT THE EARLIEST POSSIBLE TIME, ALL DEBRIS, RUBBISH, SALVAGEABLE ITEMS, HAZARDOUS AND COMBUSTIBLE SERVICES. REMOVED MATERIALS MAY NOT BE STORED, SOLD OR BURNED ON THE SITE. REMOVAL OF HAZARDOUS AND COMBUSTIBLE MATERIALS SHALL BE ACCOMPLISHED IN ACCORDANCE WITH THE PROCEDURES AS AUTHORIZED BY THE FIRE DEPARTMENT OR OTHER APPROPRIATE REGULATORY AGENCIES AND AUTHORITIES.
17. DISCONNECT, SHUT OFF AND SEAL IN CONCRETE ALL UTILITIES SERVING THE STRUCTURE(S) TO BE DEMOLISHED BEFORE THE COMMENCEMENT OF THE DESIGNATED DEMOLITION. MARK FOR POSITION ALL UTILITY DRAINAGE AND SANITARY LINES AND PROTECT ALL ACTIVE LINES. CLEARLY IDENTIFY BEFORE THE COMMENCEMENT OF DEMOLITION SERVICES THE REQUIRED INTERRUPTION OF ACTIVE SYSTEMS THAT MAY AFFECT OTHER PARTIES, AND NOTIFY ALL APPLICABLE UTILITY COMPANIES TO ENSURE THE CONTINUATION OF SERVICE.
18. THIS DEMOLITION PLAN IS INTENDED TO IDENTIFY THOSE EXISTING CONDITIONS WHICH ARE TO BE REMOVED. IT IS NOT INTENDED TO PROVIDE DIRECTION OTHER THAN THAT ALL PROCEDURES ARE TO BE IN ACCORDANCE WITH STATE, FEDERAL, LOCAL, AND JURISDICTIONAL REQUIREMENTS. THE CONTRACTOR SHALL BE RESPONSIBLE FOR ALL SAFETY PRECAUTIONS NECESSARY.
19. UNDERGROUND AND ABOVE GROUND FEATURES TO REMAIN WITHIN LIMITS OF DEMOLITION SHALL BE IDENTIFIED AND MARKED IN THE FIELD PRIOR TO BEGINNING SITE DEMOLITION.
20. CONTRACTOR TO COORDINATE WITH SURVEYOR TO RESET SITE BENCHMARKS AS NECESSARY.

NOTES

1. IN ACCORDANCE WITH STATE LAW, THE CONTRACTOR SHALL BE REQUIRED TO PLACE A PA ONE CALL FOR DEMOLITION PURPOSES AND UTILITY MARK OUT IN ADVANCE OF ANY EXCAVATION.
2. CONTRACTOR IS RESPONSIBLE FOR FIELD VERIFYING ALL EXISTING SITE IMPROVEMENTS AND UTILITIES. ALL DISCREPANCIES SHALL BE IDENTIFIED TO THE ENGINEER IN WRITING.
3. ALL EXISTING UTILITIES TO BE ABANDONED SHALL BE DISCONNECTED IN ACCORDANCE WITH MUNICIPAL AND LOCAL UTILITY REQUIREMENTS.
4. ALL EXISTING DEBRIS SHALL BE REMOVED BY CONTRACTOR IN ACCORDANCE WITH MUNICIPAL AND LOCAL UTILITY COMPANY REQUIREMENTS.

EXISTING UTILITY NOTES

1. EXISTING WATER SERVICE NOTE:
   CONTRACTOR TO LOCATE AND UTILIZE EXISTING WATER SERVICE CONNECTION IF FEASIBLE. OTHERWISE REMOVE EXISTING WATER SERVICE LINE AND CAP AT MAIN IN R.O.W. IN ACCORDANCE WITH THE LOCAL WATER COMPANY REQUIREMENTS. TERMINATION AT THE MAIN MUST BE APPROVED BY THE LOCAL WATER COMPANY PRIOR TO COMPLETION. IF THE EXISTING WATER SERVICE CAN NOT BE UTILIZED, THE NEW SERVICE IS TO BE COORDINATED AND VERIFIED FOR LOCATION WITH THE LOCAL WATER COMPANY. CONTRACTOR SHALL OBTAIN ALL REQUIRED STREET OPENING PERMITS FOR REMOVAL OF EXISTING SERVICE AND INSTALLATION OF NEW SERVICE.
2. EXISTING GAS SERVICE NOTE:
   CONTRACTOR TO LOCATE AND UTILIZE EXISTING GAS SERVICE CONNECTION IF FEASIBLE. OTHERWISE REMOVE EXISTING GAS SERVICE LINE AND CAP AT MAIN IN R.O.W. IN ACCORDANCE WITH THE LOCAL GAS COMPANY REQUIREMENTS. TERMINATION AT THE MAIN MUST BE APPROVED BY THE LOCAL GAS COMPANY PRIOR TO COMPLETION. ANY NEW SERVICE IS TO BE COORDINATED AND VERIFIED FOR LOCATION WITH THE LOCAL GAS COMPANY. THE CONTRACTOR SHALL OBTAIN ALL REQUIRED STREET OPENING PERMITS FOR REMOVAL OF EXISTING SERVICE AND INSTALLATION OF NEW SERVICE.
3. SANITARY SEWER SERVICE NOTE:
   CONTRACTOR TO LOCATE AND UTILIZE EXISTING SEWER SERVICE CONNECTION IF OF ADEQUATE SIZE AND INTEGRITY AND ACCEPTABLE TO LOCAL SEWER AUTHORITY. OTHERWISE CONTRACTOR TO REMOVE EXISTING SEWER SERVICE LINE AND CAP AT MAIN IN R.O.W. IN ACCORDANCE WITH THE LOCAL SEWER AUTHORITY REQUIREMENTS. TERMINATION AT THE MAIN MUST BE APPROVED BY THE LOCAL SEWER AUTHORITY PRIOR TO COMPLETION. IF EXISTING SEWER SERVICE CAN NOT BE UTILIZED THEN THE NEW SERVICE IS TO BE COORDINATED AND VERIFIED FOR LOCATION WITH THE LOCAL SEWER AUTHORITY. CONTRACTOR SHALL OBTAIN ALL REQUIRED STREET OPENING PERMITS FOR REMOVAL OF EXISTING SERVICE AND INSTALLATION OF NEW SERVICE.

DEMOLITION LEGEND

- EXISTING TITLE LINE (PARCEL IN QUESTION)
- EXISTING R.O.W LINE (PARCEL IN QUESTION)
- PROPERTY LINE (PARCEL IN QUESTION)
- ULTIMATE RIGHT OF WAY LINE
- OFF-SITE PROPERTY LINES
- PROPOSED LIMIT OF DISTURBANCE LINE
- PSB — PROP. LIMIT OF PROJECT SITE BOUNDARY LINE (NPDES)
- TPF — PROPOSED TREE PROTECTION FENCE
- EXISTING IMPROVEMENTS TO BE REMOVED UNLESS OTHERWISE NOTED
- TREE TO REMAIN
- TREE TO BE REMOVED
- C — EXIST. CABLE LINE TO REMAIN
- E — EXIST. ELECTRIC LINE TO REMAIN
- FO — EXIST. FIBER OPTIC LINE TO REMAIN
- FUEL — EXIST. FUEL LINE TO REMAIN
- G — EXIST. GAS LINE TO REMAIN
- OH — EXIST. OVERHEAD WIRES TO REMAIN
- T — EXIST. TELEPHONE LINE TO REMAIN
- UGET — EXIST. UNDERGROUND ELEC./TELE. SERVICE TO REMAIN
- W — EXIST. WATER LINE TO REMAIN
- S OR S — EXIST. SANITARY SEWER LINE TO REMAIN
- EXIST. STORM DRAIN LINE TO REMAIN

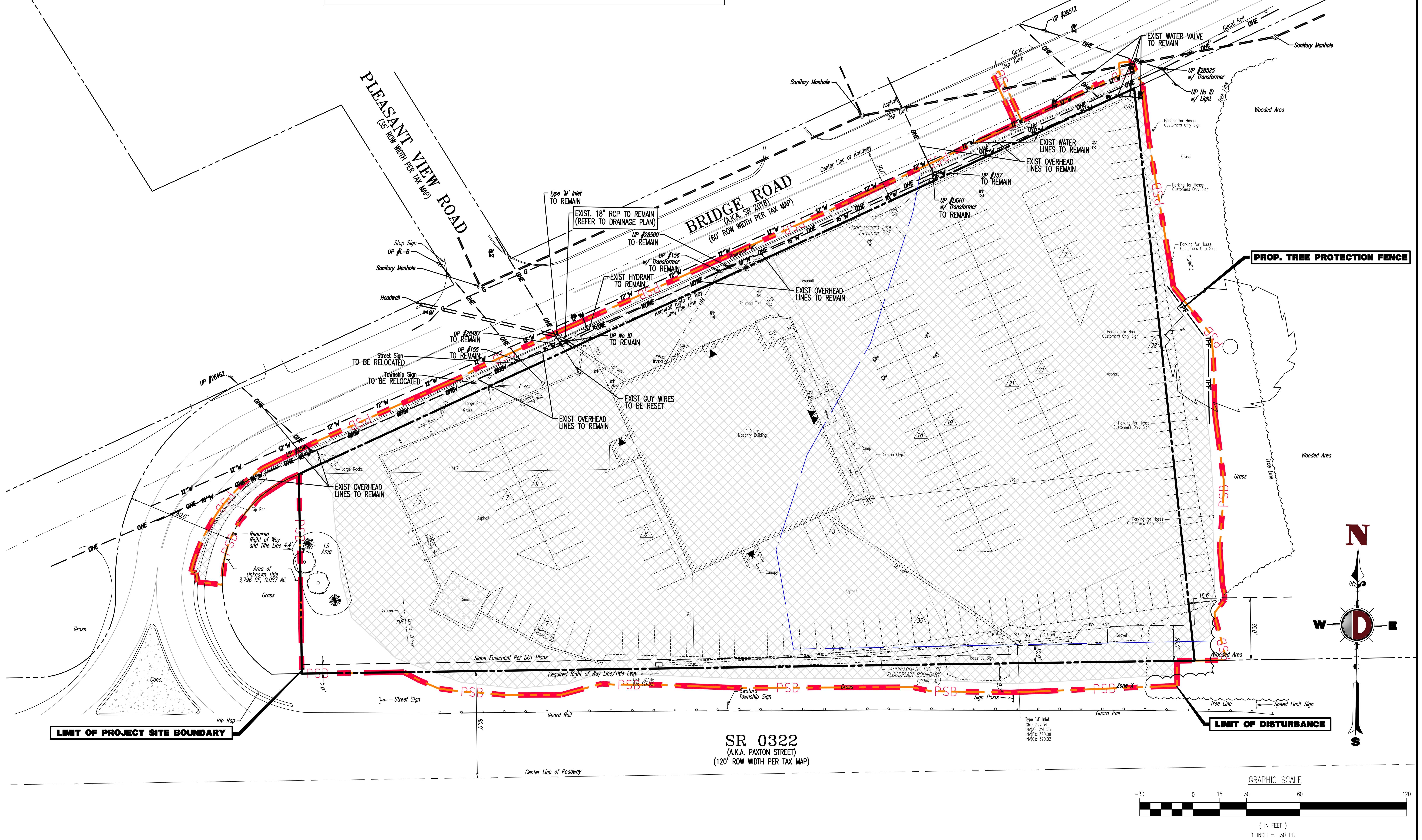

THIS PLAN SET IS FOR PERMITTING PURPOSES ONLY AND MAY NOT BE USED FOR CONSTRUCTION

REV.	DATE	COMMENTS	BY

DRAWN BY: LZ | DESIGNED BY: MS | CHECKED BY: MAW | CHECKED BY: –

PROJECT: **SWATARA PAXTON DEVELOPERS LLC**
PROPOSED WAWA FOOD MARKET & FUELING STATION
PARCEL NO. 63-022-037
US ROUTE 322 & BRIDGE ROAD (SR 2018)
TOWNSHIP OF SWATARA, DAUPHIN COUNTY, PENNSYLVANIA

811 Know what's below. Call before you dig.
PROTECT YOURSELF
ALL STATES REQUIRE NOTIFICATION OF EXCAVATORS, DESIGNERS, OR ANY PERSON PREPARING TO DISTURB THE EARTH'S SURFACE ANYWHERE IN ANY STATE
FOR STATE SPECIFIC DIRECT PHONE NUMBERS VISIT: WWW.CALL811.COM

DYNAMIC ENGINEERING
LAND DEVELOPMENT CONSULTING • PERMITTING
GEOTECHNICAL • ENVIRONMENTAL
TRAFFIC • SURVEY • PLANNING & ZONING
826 Newtown Yardley Road
Suite 201, Newtown, PA 18940
T: 267.685.0276 | F: 267.685.0361
Offices conveniently located at:
Lake Como, New Jersey • T: 732.974.0198
Chester, New Jersey • T: 908.879.9229
Marlton, New Jersey • T: 856.334.2000
Newark, New Jersey • T: 973.755.7200
Toms River, New Jersey • T: 732.974.0198
Newtown, Pennsylvania • T: 267.685.0276
Philadelphia, Pennsylvania • T: 215.253.4888
Bethlehem, Pennsylvania • T: 610.598.4400
Allen, Texas • T: 972.534.2100
Houston, Texas • T: 281.789.6400
Austin, Texas • T: 512.646.2646
Delray Beach, Florida • T: 561.921.8570
Annapolis, Maryland • T: 410.567.5000
www.dynamicec.com

JUSTIN A. GEONNOTTI
PROFESSIONAL ENGINEER
PENNSYLVANIA LICENSE No. 080629

MARK A. WHITAKER
PROFESSIONAL ENGINEER
NEW JERSEY LICENSE No. 41417

TITLE: DEMOLITION PLAN

SCALE: (H) 1"=30' (V)
DATE: 11/21/2023
PROJECT No: 1478-99-212

SHEET No: 4 OF 34
Rev. #: 0

Plotted: 11/22/23 – 12:41 PM, By: ajwright
File: P:\DECPC PROJECTS\1478 Paramount Realty\99-212 Swatara PA\Dwg\Land Dev Plans\D1478992125R0.dwg, ---> 04 DEMOLITION PLAN

COPYRIGHT © 2023 – DYNAMIC ENGINEERING CONSULTANTS, PC – ALL RIGHTS RESERVED

SEE SHEET 3 OF 34 FOR SITE PLAN NOTES

PAVEMENT LEGEND

- PROPOSED FULL DEPTH ASPHALT PAVEMENT
- PROPOSED 4" CONCRETE PAD
- PROPOSED 6" CONCRETE PAD
- PROPOSED 8" CONCRETE PAD
- PROPOSED MILL & OVERLAY

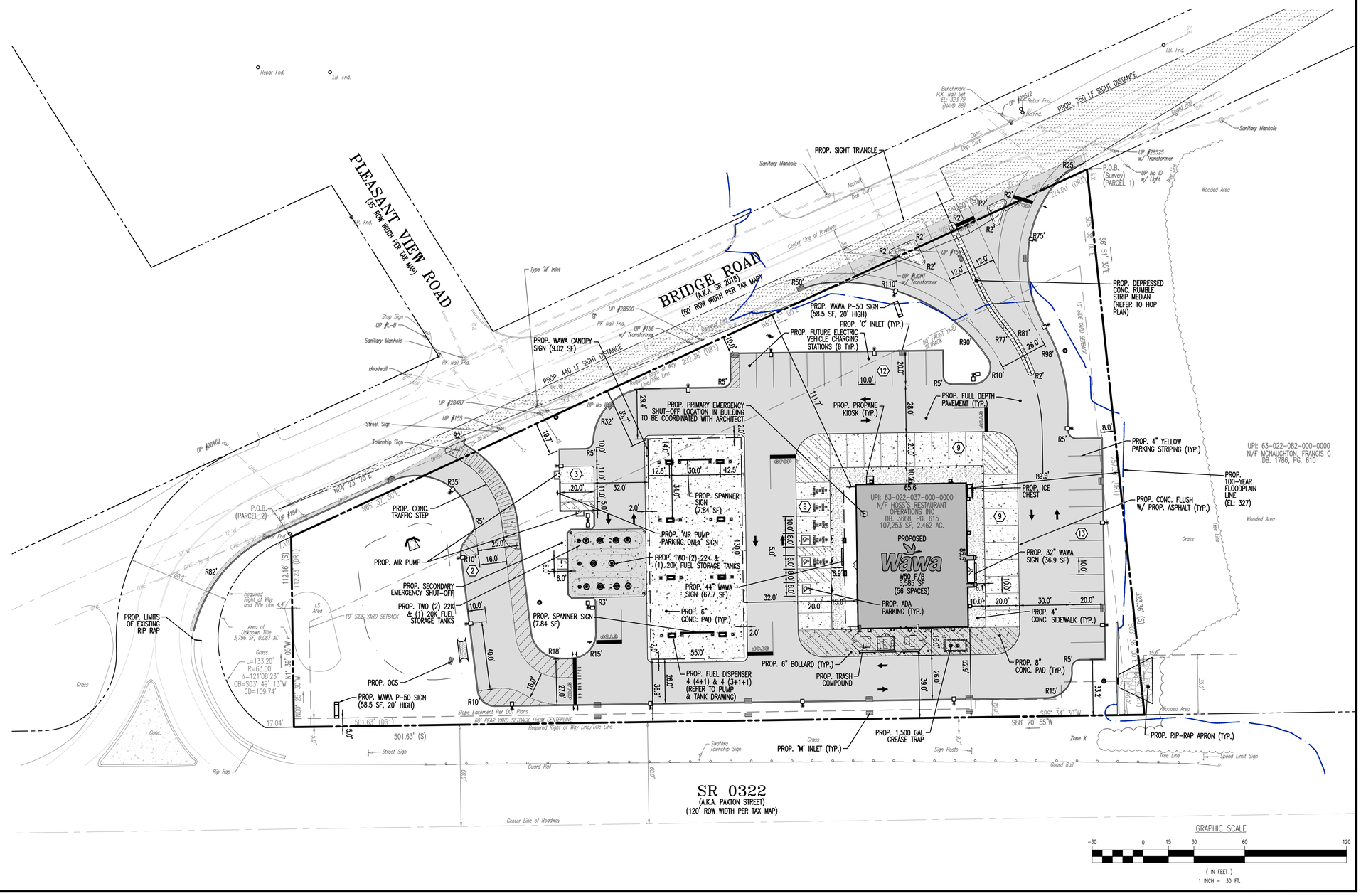

Plotted: 11/22/23 – 12:41 PM, By: djwright
File: P:\DEDPC PROJECTS\1478 Paramount Realty\99-212 Swatara PA\Dwg\Land Dev Plans\D1478992123S0.dwg, ----> 05 SITE PLAN

COPYRIGHT © 2023 – DYNAMIC ENGINEERING CONSULTANTS, PC – ALL RIGHTS RESERVED

DYNAMIC ENGINEERING CONSULTANTS, PC
• GEOTECHNICAL • ENVIRONMENTAL
• SURVEY • TRAFFIC

REV.	DATE	COMMENTS	BY

THIS PLAN SET IS FOR PERMITTING PURPOSES ONLY AND MAY NOT BE USED FOR CONSTRUCTION

DRAWN BY: LZ | DESIGNED BY: MS | CHECKED BY: MAW | CHECKED BY: –

PROJECT: **SWATARA PAXTON DEVELOPERS LLC**
PROPOSED WAWA FOOD MARKET & FUELING STATION
PARCEL NO. 63-022-037
US ROUTE 322 & BRIDGE ROAD (SR 2018)
TOWNSHIP OF SWATARA, DAUPHIN COUNTY, PENNSYLVANIA

811 Know what's below. Call before you dig.
PROTECT YOURSELF
ALL STATES REQUIRE NOTIFICATION OF EXCAVATORS, DESIGNERS, OR ANY PERSON PREPARING TO DISTURB THE EARTH'S SURFACE ANYWHERE IN ANY STATE
FOR STATE SPECIFIC DIRECT PHONE NUMBERS VISIT: WWW.CALL811.COM

DYNAMIC ENGINEERING
LAND DEVELOPMENT CONSULTING • PERMITTING
GEOTECHNICAL • ENVIRONMENTAL
TRAFFIC • SURVEY • PLANNING & ZONING
826 Newtown Yardley Road
Suite 201, Newtown, PA 18940
T: 267.685.0276 | F: 267.685.0361
Offices conveniently located at:
Lake Como, New Jersey • T: 732.974.0198
Chanel, New Jersey • T: 908.879.9329
Midtown, New Jersey • T: 856.334.2000
Neptune, New Jersey • T: 973.735.7200
Toms River, New Jersey • T: 732.974.0198
Nanticoke, Pennsylvania • T: 267.685.0276
Philadelphia, Pennsylvania • T: 215.233.4888
Bethlehem, Pennsylvania • T: 610.398.4400
Allen, Texas • T: 972.334.3100
Houston, Texas • T: 281.799.4400
Austin, Texas • T: 512.244.7612
Delray Beach, Florida • T: 561.972.8370
Annapolis, Maryland • T: 410.567.5000
www.dynamicec.com

JUSTIN A. GEONNOTTI
PROFESSIONAL ENGINEER
PENNSYLVANIA LICENSE No. 080629

MARK A. WHITAKER
PROFESSIONAL ENGINEER
NEW JERSEY LICENSE No. 41417

TITLE: SITE PLAN

SCALE: (H) 1"=30' (V) | DATE: 11/21/2023
PROJECT No: 1478-99-212

SHEET No: 5 OF 34 | Rev. #: 0

GRADING/UTILITY GRAPHIC LEGEND

- EXISTING TITLE LINE (PARCEL IN QUESTION)
- EXISTING B.O.W. LINE (PARCEL IN QUESTION)
- PROPERTY LINE (PARCEL IN QUESTION)
- ULTIMATE RIGHT OF WAY LINE
- OFF-SITE PROPERTY LINES

EXIST. CABLE LINE	PROP. CABLE LINE
EXIST. ELECTRIC LINE	PROP. ELECTRIC LINE
EXIST. FIBER OPTIC LINE	PROP. FIBER OPTIC LINE
EXIST. FUEL LINE	PROP. FUEL LINE
EXIST. OVERHEAD WIRES	PROP. OVERHEAD WIRES
EXIST. TELEPHONE LINE	PROP. TELEPHONE LINE
EXIST. UNDERGROUND ELEC./TELE. SERVICE (NO. & SIZE OF CONDUITS NOT DEFINED)	PROP. UNDERGROUND ELEC./TELE. SERVICE (NO. & SIZE OF CONDUITS NOT DEFINED)
EXIST. WATER LINE	PROP. WATER LINE
EXIST. SANITARY SEWER LINE	PROP. SANITARY SEWER LINE
EXIST. STORM DRAIN LINE	PROP. STORM DRAIN LINE
EXIST. MINOR CONTOUR & ELEVATION	PROP. FINISH GRADE CONTOUR & ELEVATION
EXIST. MAJOR CONTOUR & ELEVATION	
EXIST. MONITORING WELL	FLOOD PLAIN LINE
APPROX. STORMWATER TEST PIT LOCATION	
APPROX. BORING LOCATION	PROP. GRADE SPOT ELEV.
EXIST. SPOT ELEVATIONS	PROP. TOP OF CURB & FINISHED GRADE ELEV.
EXIST. GUTTER ELEV.	PROP. FINISHED FLOOR ELEV.
EXIST. TOP OF CURB ELEV.	PROP. TOP OF WALL & FINISHED GRADE @ LOW SIDE OF WALL (ACTUAL BOTTOM OF WALL FOOTING TO BE ESTABLISHED BY WALL DESIGNER)
EXIST. FINISH FLOOR ELEV.	PROP. TOP OF EXTENDED CURB, (GH) FINISHED GRADE @ HIGH SIDE OF EXTENDED CURB & (GL) FINISHED GRADE @ LOW SIDE OF EXTENDED CURB
EXIST. GARAGE FLOOR ELEV.	PROP. DIRECTION OF DRAINAGE FLOW ARROW
EXIST. FIRE HYDRANT	PROP. HYDRANT
EXIST. WATER VALVE	PROP. WATER VALVE
EXIST. GAS VALVE	PROP. GAS VALVE
EXIST. GAS METER	PROP. STORM CLEANOUT
EXIST. ELECTRIC METER	PROP. SANITARY CLEANOUT
EXIST. ELECTRIC BOX	PROP. UTILITY POLE
EXIST. CLEAN OUT	PROP. AREA LIGHT
EXIST. WELL	PROP. OUTLET CONTROL STRUCTURE
EXIST. WATER SHUT OFF VALVE	PROP. DRAINAGE MANHOLE
EXIST. TELEPHONE BOX	PROP. SANITARY SEWER MANHOLE
EXIST. CABLE TV BOX	PROP. 'M' INLET
EXIST. UTILITY POLE	PROP. 'C' INLET
EXIST. GUY WIRE	PROP. DOUBLE 'M' INLET
EXIST. LIGHT POLE	PROP. YARD INLET
EXIST. BUILDING LIGHT	PROP. FLARED END SECTION
EXIST. SHOE BOX LIGHT	PROP. HEADWALL
EXIST. COBRA LIGHT POLE	
EXIST. TRAFFIC SIGNAL POLE	
EXIST. MANHOLE	
EXIST. 'M' INLET	
EXIST. 'C' INLET	
EXIST. DOUBLE 'M' INLET	
EXIST. YARD INLET	
EXIST. FLARED END SECTION	
EXIST. HEADWALL	

GRADING NOTES

1. SITE GRADING SHALL BE PERFORMED IN ACCORDANCE WITH THESE PLANS AND SPECIFICATIONS AND THE RECOMMENDATIONS SET FORTH IN THE SOILS REPORT REFERENCED IN THIS PLAN SET. THE CONTRACTOR SHALL BE RESPONSIBLE FOR REMOVING AND REPLACING ALL SOFT, YIELDING OR UNSUITABLE MATERIALS AND REPLACING WITH SUITABLE MATERIALS AS SPECIFIED IN THE SOILS REPORT. ALL EXCAVATED OR FILLED AREAS SHALL BE COMPACTED TO 95% OF MODIFIED PROCTOR MAXIMUM DENSITY PER A.S.T.M., TEST D-1557. MOISTURE CONTENT AT TIME OF PLACEMENT SHALL NOT EXCEED 2% ABOVE NOR 3% BELOW OPTIMUM. CONTRACTOR SHALL SUBMIT A COMPACTION REPORT PREPARED BY A QUALIFIED SOILS ENGINEER, REGISTERED WITHIN THE STATE WHERE THE WORK IS PERFORMED, VERIFYING THAT ALL FILLED AREAS AND SUBGRADE AREAS WITHIN THE BUILDING PAD AREA AND AREAS TO BE PAVED HAVE BEEN COMPACTED IN ACCORDANCE WITH THESE PLANS AND SPECS AND THE RECOMMENDATIONS SET FORTH IN THE SOILS REPORT.
2. CONTRACTOR IS RESPONSIBLE FOR VERIFICATION OF EXISTING TOPOGRAPHIC INFORMATION AND UTILITY INVERT ELEVATIONS PRIOR TO COMMENCEMENT OF ANY CONSTRUCTION. CONTRACTOR TO ENSURE 0.75% MIN. SLOPE AGAINST ALL ISLAND GUTTERS, CURBS AND 1.0% ON ALL CONCRETE SURFACES, AND 1-1/2% MIN. ON ASPHALT, TO PREVENT PONDING. ANY DISCREPANCIES THAT MAY EFFECT THE PUBLIC SAFETY OR PROJECT COST, MUST BE IDENTIFIED TO THE ENGINEER IN WRITING IMMEDIATELY PROCEEDING WITH CONSTRUCTION WITH DESIGN DISCREPANCIES IS DONE SO AT THE CONTRACTOR'S OWN RISK.
3. PROPOSED TOP OF CURB ELEVATIONS ARE GENERALLY 6" ABOVE EXISTING LOCAL ASPHALT GRADE UNLESS OTHERWISE NOTED. FIELD ADJUST TO CREATE A MIN. OF 0.75% GUTTER GRADE ALONG CURB FACE. ENGINEER TO APPROVE FINAL CURBING CUT SHEETS PRIOR TO INSTALLATION.
4. SUBBASE MATERIAL FOR SIDEWALKS, CURB, OR ASPHALT SHALL BE FREE OF ORGANICS AND OTHER UNSUITABLE MATERIALS. SHOULD SUBBASE BE DEEMED UNSUITABLE, SUBBASE IS TO BE REMOVED AND FILLED WITH APPROVED FILL MATERIAL COMPACTED TO 95% OPTIMUM DENSITY (AS DETERMINED BY MODIFIED PROCTOR METHOD).
5. REFER TO SITE PLAN FOR ADDITIONAL NOTES.
6. IN CASE OF DISCREPANCIES BETWEEN PLANS, THE SITE PLAN WILL SUPERCEDE IN ALL CASES. CONTRACTOR MUST NOTIFY ENGINEER OF RECORD OF ANY CONFLICT IMMEDIATELY.
7. MAXIMUM CROSS SLOPE OF 2% ON ALL SIDEWALKS.
8. CONTRACTOR TO ENSURE A MAXIMUM OF 2% SLOPE IN ALL DIRECTIONS IN ADA PARKING SPACES AND ADA ACCESS AISLES. CONTRACTOR TO ENSURE A MAXIMUM OF 5% RUNNING SLOPE AND 2% CROSS SLOPE ALONG ALL OTHER PORTIONS OF ACCESSIBLE ROUTE, WITH THE EXCEPTION OF RAMPS AND CURB RAMPS. CONTRACTOR SHALL CLARIFY ANY QUESTIONS CONCERNING CONSTRUCTION IN ADA AREAS WITH THE ENGINEER PRIOR TO THE START OF CONSTRUCTION.
9. THE CONTRACTOR IS RESPONSIBLE FOR AS-BUILT PLANS AND GRADE CONTROL UNLESS DEFINED OTHERWISE ELSEWHERE IN THE CONTRACT DOCUMENTS.

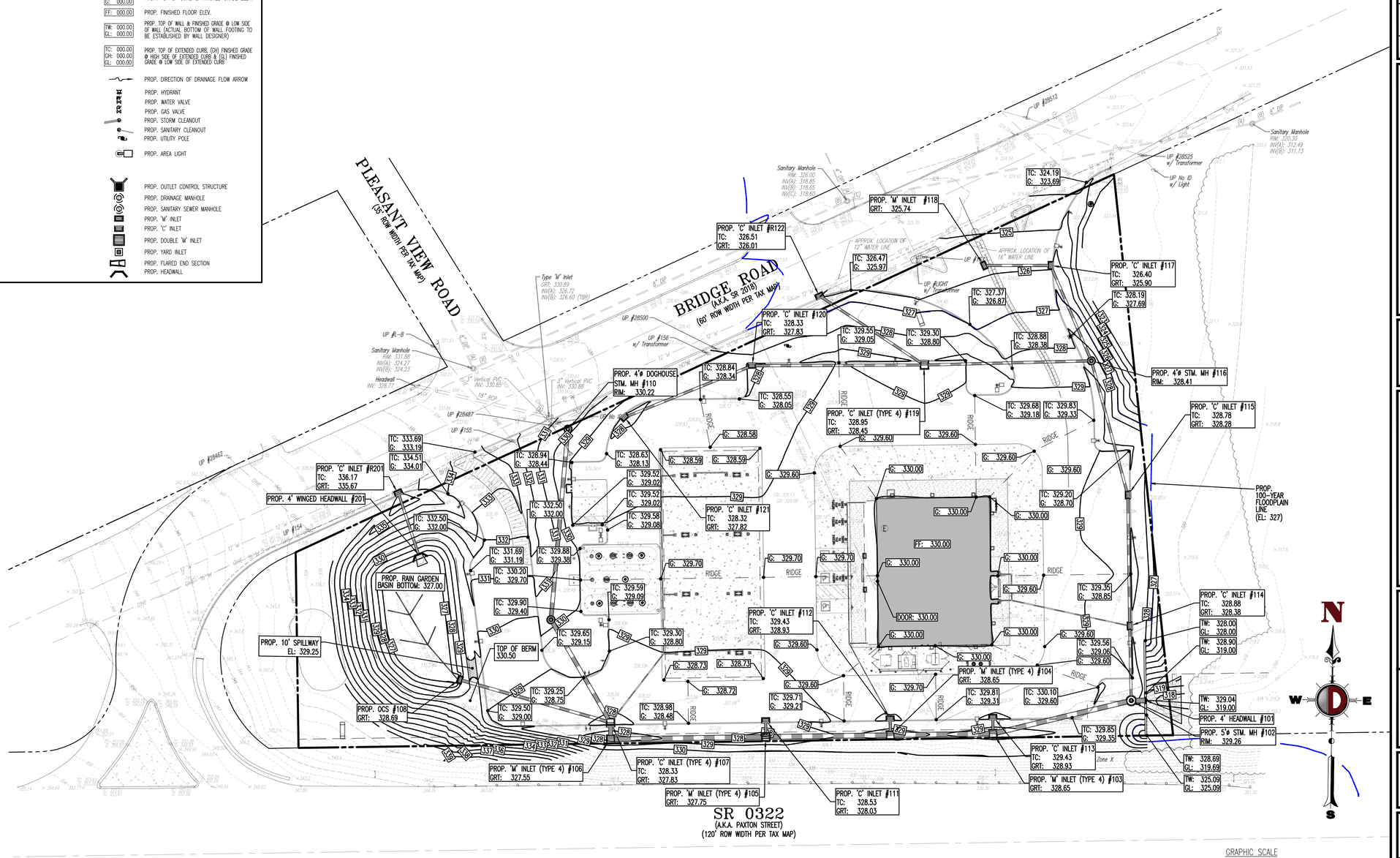

COPYRIGHT © 2023 - DYNAMIC ENGINEERING CONSULTANTS, PC - ALL RIGHTS RESERVED

Plotted: 11/22/23 - 12:42 PM, By: djwright
File: P:\DEDPC PROJECTS\1478 Paxtonmount Realty\99-212 Swatara PA\Dwg\Land Dev Plans\D1478992125G0.dwg, ----> 06 GRADING PLAN

DYNAMIC ENGINEERING CONSULTANTS, PC
SURVEY • TRAFFIC

REV.	DATE	COMMENTS	BY

THIS PLAN SET IS FOR PERMITTING PURPOSES ONLY AND MAY NOT BE USED FOR CONSTRUCTION

DRAWN BY: LZ | DESIGNED BY: MS | CHECKED BY: MAW | CHECKED BY: –

PROJECT: SWATARA PAXTON DEVELOPERS LLC
PROPOSED WAWA FOOD MARKET & FUELING STATION
PARCEL NO. 63-022-037
US ROUTE 322 & BRIDGE ROAD (SR 2018)
TOWNSHIP OF SWATARA, DAUPHIN COUNTY, PENNSYLVANIA

811 Know what's below. Call before you dig.
PROTECT YOURSELF
ALL STATES REQUIRE NOTIFICATION OF EXCAVATORS, DESIGNERS, OR ANY PERSON PREPARING TO DISTURB THE EARTH'S SURFACE ANYWHERE IN ANY STATE
FOR STATE SPECIFIC DIRECT PHONE NUMBERS VISIT: WWW.CALL811.COM

DYNAMIC ENGINEERING
LAND DEVELOPMENT CONSULTING • PERMITTING
GEOTECHNICAL • ENVIRONMENTAL
TRAFFIC • SURVEY • PLANNING & ZONING
826 Newtown Yardley Road
Suite 201, Newtown, PA 18940
T: 267.685.0276 | F: 267.685.0361
Offices conveniently located at:
Lake Como, New Jersey • T: 732.717.0178
Clifton, New Jersey • T: 908.879.9229
Wallkill, New Jersey • T: 862.334.2000
Neptune, New Jersey • T: 973.735.7200
Toms River, New Jersey • T: 732.974.0198
Newtown, Pennsylvania • T: 267.685.0276
Philadelphia, Pennsylvania • T: 215.320.4888
Bethlehem, Pennsylvania • T: 610.318.4400
Allen, Texas • T: 972.334.7700
Houston, Texas • T: 281.789.6400
Austin, Texas • T: 512.644.7544
Delray Beach, Florida • T: 561.921.8370
Annapolis, Maryland • T: 410.647.5000
www.dynamicec.com

JUSTIN A. GEONNOTTI
PROFESSIONAL ENGINEER
PENNSYLVANIA LICENSE No. PE080629

MARK A. WHITAKER
PROFESSIONAL ENGINEER
NEW JERSEY LICENSE No. 41417

TITLE: GRADING PLAN

SCALE: (H) 1"=30' (V) | DATE: 11/21/2023
PROJECT No: 1478-99-212

SHEET No: 6 OF 34 | Rev. #: 0

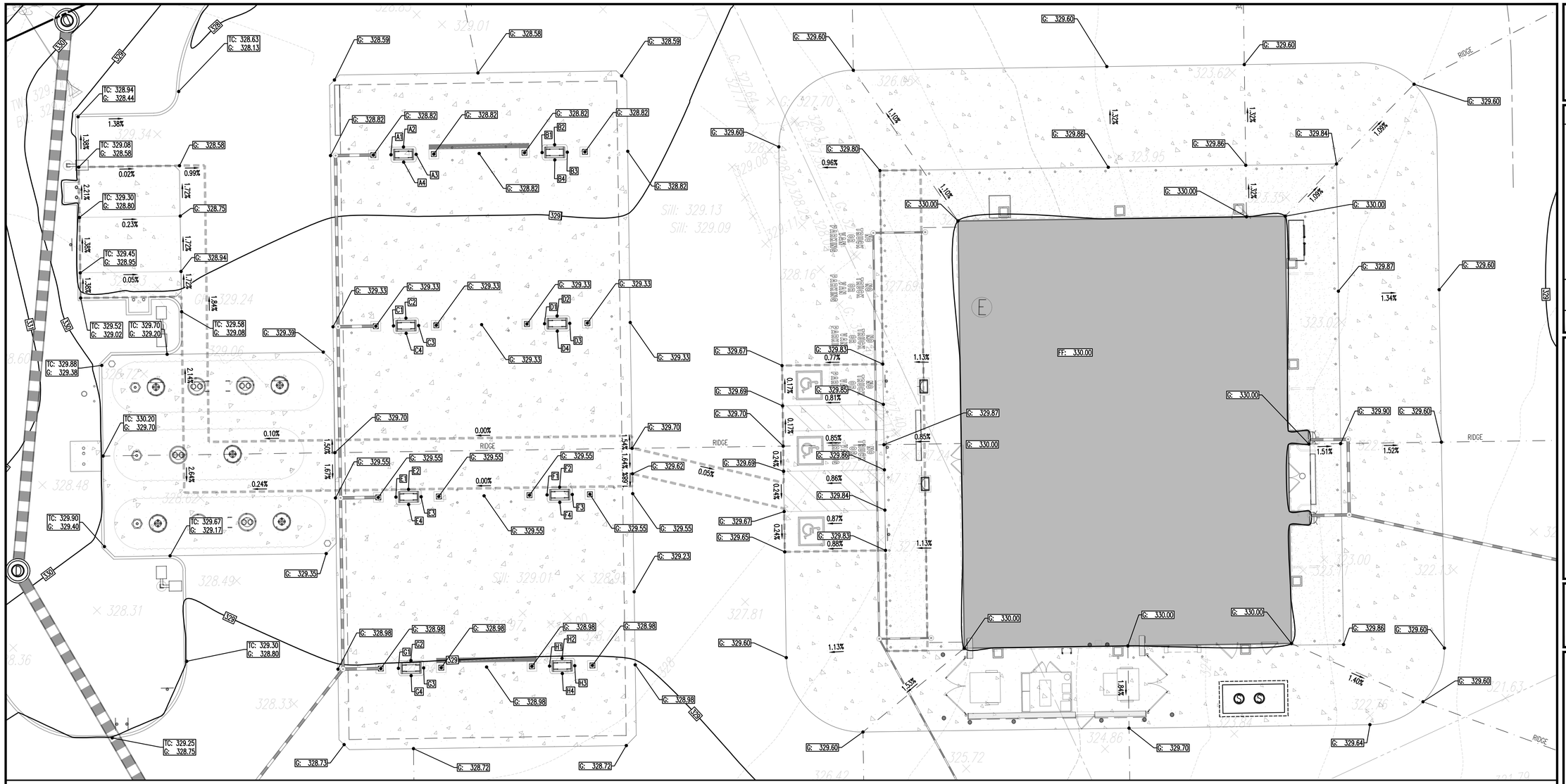

ADA ACCESS INSET

SCALE: 1" = 10'

FUEL DISPENSER ISLAND GRADING CHART		
SPOT SHOT	TOP OF ISLAND	GRADE
A1	329.34	328.82
A2	329.34	328.79
A3	329.34	328.82
A4	329.34	328.84
B1	329.34	328.82
B2	329.34	328.79
B3	329.34	328.82
B4	329.34	328.84
C1	329.85	329.33
C2	329.85	329.30
C3	329.85	329.33
C4	329.85	329.35
D1	329.85	329.33
D2	329.85	329.30
D3	329.85	329.33
D4	329.85	329.35

FUEL DISPENSER ISLAND GRADING CHART		
SPOT SHOT	TOP OF ISLAND	GRADE
E1	330.08	329.55
E2	330.08	329.58
E3	330.08	329.55
E4	330.08	329.53
F1	330.08	329.55
F2	330.08	329.58
F3	330.08	329.55
F4	330.08	329.53
G1	329.51	328.98
G2	329.51	329.01
G3	329.51	328.98
G4	329.51	328.96
H1	329.51	328.98
H2	329.51	329.01
H3	329.51	328.98
H4	329.51	328.96

ADA NOTES

ALL SLOPES INDICATED ARE ACTUAL. CONTRACTOR TO REFER TO LATEST ADA GUIDELINES FOR SLOPE LIMITS. AT THE TIME OF PLAN DESIGN, THE SLOPE LIMITS ARE AS FOLLOWS:

SIDEWALKS/ ACCESSIBLE ROUTES
- RUNNING SLOPE: 1:20 (5%) MAX. (4.5% MAX. FOR NEW CONSTRUCTION)
- CROSS SLOPE: 1:48 (2.08%) MAX., 1.0% MIN. (1.5% MAX. FOR NEW CONSTRUCTION)
- INTERSECTION SLOPE: 1:48 (2.08%) MAX. IN ALL DIRECTIONS (1.5% MAX. FOR NEW CONSTRUCTION)
- CHANGE IN LEVELS: 1/4" MAX. HEIGHT OR 1/2" MAX. HEIGHT WITH BEVELED EDGE BEVELED EDGE SLOPE OF 1:2 (50%) MAX.
- GAPS: 1/2" MAX. WIDTH ELONGATED OPENINGS SHALL BE PLACED SO LONG DIMENSION IS PERPENDICULAR TO PATH OF TRAVEL

CURB RAMP
- SLOPE 1:12 (8.3%) MAX. (7.4% MAX. FOR NEW CONSTRUCTION)
- SIDE FLARE SLOPE: 1:10 (10%) MAX. (WHERE PEDS CROSS RAMP)
- BOTTOM LANDING: 48" MIN. LENGTH; WIDTH TO MATCH CURB RAMP; 1:48 MAX. (2.08%) IN ALL DIRECTIONS (1.5% MAX. FOR NEW CONSTRUCTION)
- TOP LANDING: 36" MIN. LENGTH; WIDTH TO MATCH CURB RAMP; 1:48 MAX. (2.08%) CROSS SLOPE (1.5% MAX. FOR NEW CONSTRUCTION) AND 1:20 (5%) RUNNING SLOPE (4.5% MAX FOR NEW CONSTRUCTION)

ACCESSIBILITY PARKING STALLS
- SPACE AND ACCESS AISLE SLOPE: 1:48 MAX. (2.08%) IN ALL DIRECTIONS (1.5% MAX. FOR NEW CONSTRUCTION)

CROSSWALKS
- RUNNING SLOPE: 1:20 (5%) MAX. (4.5% MAX. FOR NEW CONSTRUCTION)
- CROSS SLOPE: 1:48 (2.08%) MAX. (1.5% MAX. FOR NEW CONSTRUCTION)
- CHANGE IN LEVELS: 1/4" MAX. HEIGHT OR 1/2" MAX. HEIGHT WITH BEVELED EDGE. BEVELED EDGE SLOPE OF 1:2 (50%) MAX. GAPS: 1/2" MAX. WIDTH ELONGATED OPENINGS SHALL BE PLACED SO LONG DIMENSION IS PERPENDICULAR TO PATH OF TRAVEL

RAMPS
- SLOPE: 1:12 (8.3%) MAX. (7.4% MAX. FOR NEW CONSTRUCTION)
- EXISTING RAMPS; SLOPE: 1:10 (10%) MAX. FOR RISE OF 6"; 1:8 (12.5%) MAX. FOR MAX. RISE OF 3"
- MAX. RISE: 30"
- MIN. CLEAR WIDTH: 36"
- MIN. LANDING CLEAR LENGTH: 60"
- MAX. CROSS SLOPE: 1:48 (2.08%) (1.5% MAX. FOR NEW CONSTRUCTION)

N
W E
S

GRAPHIC SCALE

−10 0 5 10 20 40

(IN FEET)
1 INCH = 10 FT.

Plotted: 11/22/23 – 12:42 PM, By: djwright
File: P:\DEDPC PROJECTS\1478 Paramount Realty\99-212 Swatara PA\Dwg\Land Dev Plans\D1478992125SHA040.dwg, ---> 07 ADA GRADING PLAN

COPYRIGHT © 2023 – DYNAMIC ENGINEERING CONSULTANTS, PC – ALL RIGHTS RESERVED

DYNAMIC ENGINEERING CONSULTANTS • DESIGN • SURVEY • TRAFFIC

REV.	DATE	COMMENTS	BY

THIS PLAN SET IS FOR PERMITTING PURPOSES ONLY AND MAY NOT BE USED FOR CONSTRUCTION

DRAWN BY: LZ | DESIGNED BY: MS | CHECKED BY: MAW | CHECKED BY: –

PROJECT: **SWATARA PAXTON DEVELOPERS LLC**
PROPOSED WAWA FOOD MARKET & FUELING STATION
PARCEL NO. 63-022-037
US ROUTE 322 & BRIDGE ROAD (SR 2018)
TOWNSHIP OF SWATARA, DAUPHIN COUNTY, PENNSYLVANIA

811 Know what's below. Call before you dig.
PROTECT YOURSELF
ALL STATES REQUIRE NOTIFICATION OF EXCAVATORS, DESIGNERS, OR ANY PERSON PREPARING TO DISTURB THE EARTH'S SURFACE ANYWHERE IN ANY STATE
FOR STATE SPECIFIC DIRECT PHONE NUMBERS VISIT: WWW.CALL811.COM

DYNAMIC ENGINEERING
LAND DEVELOPMENT CONSULTING • PERMITTING
GEOTECHNICAL • ENVIRONMENTAL
TRAFFIC • SURVEY • PLANNING & ZONING
826 Newtown Yardley Road
Suite 201, Newtown, PA 18940
T: 267.685.0276 | F: 267.685.0361
Offices conveniently located at:
Lake Grove, New Jersey • T: 732.714.0778
Clifton, New Jersey • T: 908.879.9229
Wall-Ocean, New Jersey • T: 856.334.2000
Newark, New Jersey • T: 973.733.7200
Toms River, New Jersey • T: 732.914.0178
Newtown, Pennsylvania • T: 267.685.0276
Philadelphia, Pennsylvania • T: 215.203.4888
Bethlehem, Pennsylvania • T: 610.316.4400
Allen, Texas • T: 972.534.2700
Houston, Texas • T: 281.759.6400
Kyle, Texas • T: 512.644.7544
Delray Beach, Florida • T: 561.921.8370
Annapolis, Maryland • T: 410.647.5020
www.dynamicec.com

JUSTIN A. GEONNOTTI
PROFESSIONAL ENGINEER
PENNSYLVANIA LICENSE No. 080629

MARK A. WHITAKER
PROFESSIONAL ENGINEER
NEW JERSEY LICENSE No. 41417

TITLE: ADA GRADING PLAN

SCALE: (H) 1"=10' (V) | DATE: 11/21/2023
PROJECT No: 1478-99-212

SHEET No: 7 OF 34 | Rev. #: 0

BASIN MAINTENANCE NOTES

1. STORM WATER MANAGEMENT FACILITIES SHALL BE REGULARLY MAINTAINED TO INSURE THEY FUNCTION AT DESIGN CAPACITY AND TO PREVENT HEALTH HAZARDS ASSOCIATED WITH DEBRIS BUILDUP AND STAGNANT WATER. THE PRIVATELY OWNED PORTION OF THE SYSTEM MUST BE PRIVATELY MAINTAINED.
2. RESPONSIBILITY FOR OPERATION AND MAINTENANCE OF STORM WATER FACILITIES, INCLUDING PERIODIC REMOVAL AND DISPOSAL OF ACCUMULATED PARTICULATE MATERIAL AND DEBRIS, SHALL REMAIN WITH THE OWNER OR OWNERS OF THE PROPERTY, WITH PERMANENT ARRANGEMENTS THAT IS SHALL PASS TO ANY SUCCESSIVE OWNER, UNLESS ASSUMED BY A GOVERNMENTAL AGENCY. MAINTENANCE SHALL INCLUDE BUT NOT BE LIMITED TO THE FOLLOWING: VISUAL INSPECTION OF ALL SYSTEM COMPONENTS AT LEAST TWICE EACH YEAR; VACUUMING OF ALL STORM SEWER INLETS ONCE EVERY SIX MONTHS (FREQUENCY OF VACUUMING MAY BE ADJUSTED TO ONCE A YEAR IF FIRST YEAR MAINTENANCE RECORDS INDICATE THAT SEDIMENT AND DEBRIS ACCUMULATION IS INSIGNIFICANT); REVERSE FLUSHING AND VACUUMING IF SYSTEM INSPECTIONS INDICATE SIGNIFICANT ACCUMULATION OF SEDIMENT IN THE PIPES; AND PERIODIC REMOVAL AND DISPOSAL OF OTHER MATERIAL AND DEBRIS.
3. IN THE EVENT THAT THE FACILITY BECOMES A DANGER TO PUBLIC SAFETY OR PUBLIC HEALTH, OR IF IT IS IN NEED OF MAINTENANCE, THE OWNER SHALL AFFECT SUCH MAINTENANCE AND REPAIR OF THE FACILITY IN A MANNER THAT IS APPROVED BY THE MUNICIPAL ENGINEER OR HIS DESIGNEE. IF THE OWNER FAILS OR REFUSES TO PERFORM SUCH MAINTENANCE AND REPAIR, THE MUNICIPALITY MAY IMMEDIATELY PROCEED TO DO SO AND SHALL BILL THE COST THEREOF TO THE OWNER.
4. THE OWNER SHALL RETAIN DYNAMIC EARTH, LLC OR ALTERNATE QUALIFIED GEOTECHNICAL ENGINEER TO TEST SOIL PERMEABILITY AND PROVIDE CONSTRUCTION PHASE INSPECTIONS OF THE BASIN BOTTOM SOILS AND ANY FILL MATERIALS WITHIN ANY PROPOSED INFILTRATION OR RETENTION BASIN TO COMPARE RESULTS TO DESIGN CRITERIA.
5. CONTRACTOR IS TO REMOVE EXISTING UNSUITABLE OR OVERLY COMPACT SOIL OR ROCK AS NEEDED TO ACHIEVE REQUIRED PERMEABILITY AS DIRECTED BY THE OWNER'S GEOTECHNICAL ENGINEER, AND NEW FILL, IF NEEDED, SHALL HAVE AN IN PLACE PERMEABILITY GREATER THAN OR EQUAL TO THE DESIGN CRITERIA.
6. CONTRACTOR IS RESPONSIBLE FOR CONTACTING THE OWNER'S GEOTECHNICAL ENGINEER PRIOR TO ONSET OF CONSTRUCTION TO SUBMIT AND CONFIRM THE CONTRACTOR'S PROPOSED MEANS AND MATERIALS AND TO SCHEDULE INSPECTIONS FOR BOTTOM OF BASIN, REMOVAL OF UNSUITABLE SOIL, FILL PLACEMENT, AND FINAL BASIN PERMEABILITY TESTING.
7. THE CONTRACTOR IS RESPONSIBLE FOR AS-BUILT PLANS AND GRADE CONTROL UNLESS DEFINED OTHERWISE ELSEWHERE IN THE CONTRACT DOCUMENTS.

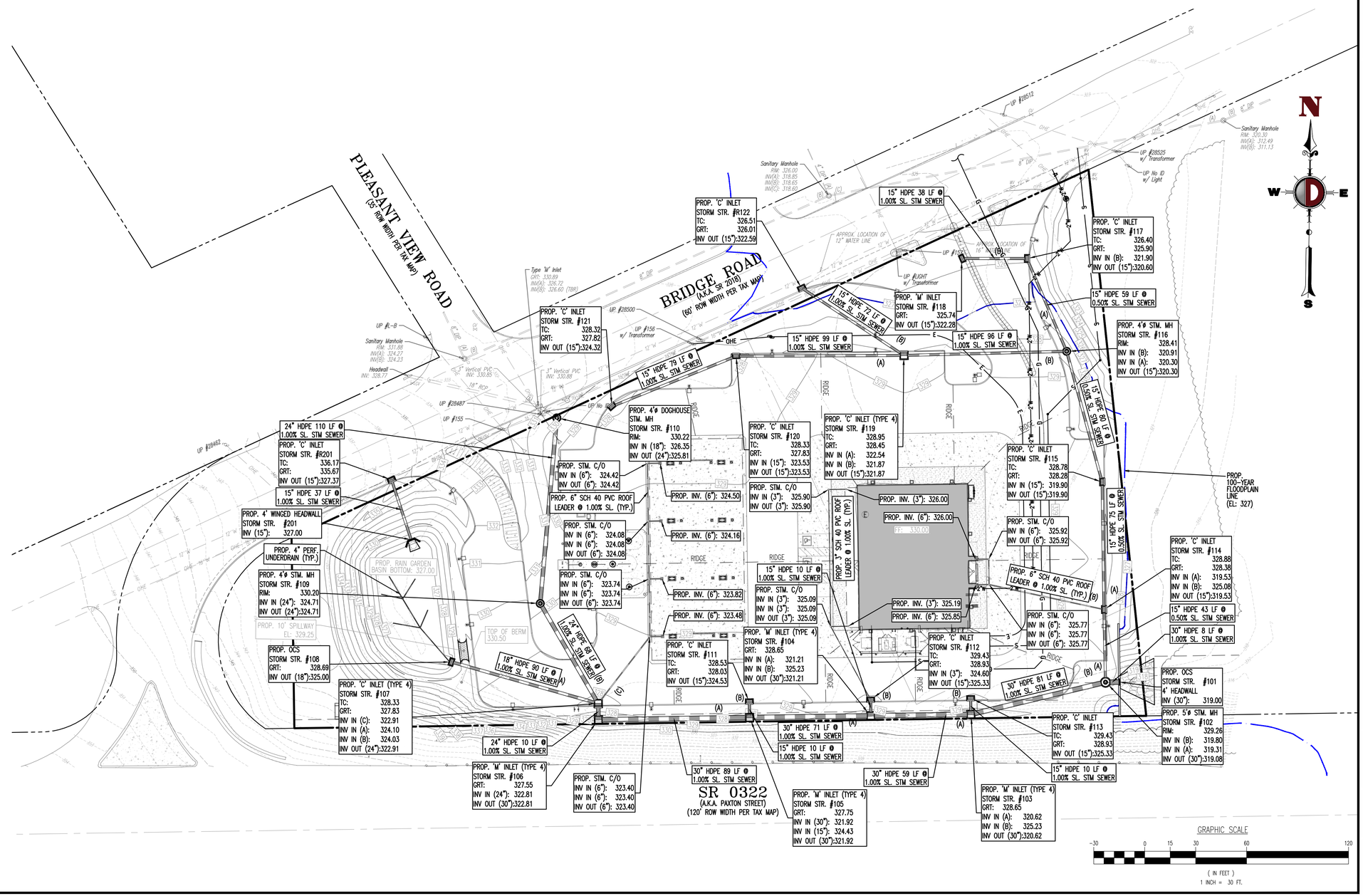

DYNAMIC ENGINEERING • EARTH • SURVEY • TRAFFIC

REV.	DATE	COMMENTS	BY

THIS PLAN SET IS FOR PERMITTING PURPOSES ONLY AND MAY NOT BE USED FOR CONSTRUCTION

DRAWN BY: LZ | DESIGNED BY: MS | CHECKED BY: MAW | CHECKED BY: –

PROJECT: **SWATARA PAXTON DEVELOPERS LLC**
PROPOSED WAWA FOOD MARKET & FUELING STATION
PARCEL NO. 63-022-037
US ROUTE 322 & BRIDGE ROAD (SR 2018)
TOWNSHIP OF SWATARA, DAUPHIN COUNTY, PENNSYLVANIA

811 Know what's below. Call before you dig.
PROTECT YOURSELF
ALL STATES REQUIRE NOTIFICATION OF EXCAVATORS, DESIGNERS, OR ANY PERSON PREPARING TO DISTURB THE EARTH'S SURFACE ANYWHERE IN ANY STATE
FOR STATE SPECIFIC DIRECT PHONE NUMBERS VISIT: WWW.CALL811.COM

DYNAMIC ENGINEERING
LAND DEVELOPMENT CONSULTING • PERMITTING
GEOTECHNICAL • ENVIRONMENTAL
TRAFFIC • SURVEY • PLANNING & ZONING
826 Newtown Yardley Road
Suite 201, Newtown, PA 18940
T: 267.685.0276 | F: 267.685.0361
Offices conveniently located at:
Lake Carmel, New Jersey • T: 732.974.0198
Chester, New Jersey • T: 908.879.9329
Wall-Ocean, New Jersey • T: 856.334.2000
Neward, New Jersey • T: 973.733.7200
Toms River, New Jersey • T: 732.974.0198
Newtown, Pennsylvania • T: 267.685.0276
Philadelphia, Pennsylvania • T: 215.523.4888
Bethlehem, Pennsylvania • T: 610.376.4400
Allen, Texas • T: 972.534.3700
Houston, Texas • T: 281.789.6400
Kyle, Texas • T: 512.644.7544
Delray Beach, Florida • T: 561.921.8370
Annapolis, Maryland • T: 410.547.3000
www.dynamicec.com

JUSTIN A. GEONNOTTI
PROFESSIONAL ENGINEER
PENNSYLVANIA LICENSE No. 080629

MARK A. WHITAKER
PROFESSIONAL ENGINEER
NEW JERSEY LICENSE No. 41417

TITLE:
DRAINAGE PLAN

SCALE: (V) 1"=30' (V) | DATE: 11/21/2023
PROJECT No: 1478-99-212

SHEET No: 8 OF 34 | Rev. #: 0

Plotted: 11/22/23 – 12:42 PM, By: ajwright
File: P:\DEPC PROJECTS\1478 Paxtonmount Realty\99-212 Swatara PA\Dwg\Land Dev Plans\D1478992123W0.dwg, ---> 08 DRAINAGE PLAN

COPYRIGHT © 2023 – DYNAMIC ENGINEERING CONSULTANTS, PC – ALL RIGHTS RESERVED

UTILITY NOTES

1. LOCATION OF ALL EXISTING AND PROPOSED SERVICES ARE APPROXIMATE AND MUST BE CONFIRMED INDEPENDENTLY WITH LOCAL UTILITY COMPANIES PRIOR TO COMMENCEMENT OF ANY CONSTRUCTION OR EXCAVATION. SANITARY SEWER AND ALL OTHER UTILITY SERVICE CONNECTION POINTS SHALL BE CONFIRMED INDEPENDENTLY BY THE CONTRACTOR IN FIELD PRIOR TO THE COMMENCEMENT OF CONSTRUCTION. ALL DISCREPANCIES SHALL BE REPORTED IMMEDIATELY IN WRITING TO THE ENGINEER. CONSTRUCTION SHALL COMMENCE BEGINNING AT THE LOWEST INVERT (POINT OF CONNECTION) AND PROGRESS UP GRADIENT. INTERFACE POINTS (CROSSINGS) WITH EXISTING UNDERGROUND UTILITIES SHALL BE FIELD VERIFIED BY TEST PIT PRIOR TO COMMENCEMENT OF CONSTRUCTION.
2. IT SHALL BE THE CONTRACTOR'S RESPONSIBILITY TO NOTIFY THE PENNSYLVANIA ONE-CALL SYSTEM 72 HOURS PRIOR TO ANY EXCAVATION ON THIS SITE. CONTRACTOR SHALL ALSO NOTIFY LOCAL WATER & SEWER DEPARTMENTS TO MARK OUT THEIR UTILITIES.
3. REFER TO ARCHITECTURAL DRAWINGS FOR EXACT BUILDING UTILITY CONNECTION LOCATIONS. WHERE CONFLICTS EXIST WITH THESE SITE PLANS, ENGINEER IS TO BE NOTIFIED PRIOR TO CONSTRUCTION TO RESOLVE SAME. SERVICE SIZES TO BE DETERMINED BY ARCHITECT.
4. WATER SERVICE MATERIALS SHALL BE SPECIFIED BY THE LOCAL UTILITY COMPANY. CONTRACTORS PRICE FOR WATER SERVICE SHALL INCLUDE ALL FEES AND APPURTENANCES REQUIRED BY THE UTILITY TO PROVIDE A COMPLETE WORKING SERVICE.
5. ALL WATER MAIN SHALL BE CEMENT-LINED, CLASS 52 DUCTILE IRON PIPE, UNLESS OTHERWISE DESIGNATED.
6. THE MINIMUM DIAMETER FOR DOMESTIC WATER SERVICES SHALL BE 1 INCH.
7. SEWER MAINS SHALL BE SEPARATED FROM WATER MAINS BY A DISTANCE OF AT LEAST 10 FEET HORIZONTALLY. WHERE THIS IS NOT POSSIBLE, THE PIPES SHALL BE IN SEPARATE TRENCHES WITH THE SEWER MAIN AT LEAST 18 INCHES BELOW THE WATER MAIN. ALL SEWER MAINS SHALL BE SDR-35 PVC PIPE UNLESS OTHERWISE DESIGNATED.
8. ALL SEWER PIPE INSTALLED WITH LESS THAN 3 FEET OF COVER, GREATER THAN 20 FEET OF COVER OR WITHIN 18 INCHES OF A WATER MAIN SHALL BE CONSTRUCTED OF DUCTILE IRON PIPE. ALL DUCTILE IRON SEWER PIPE SHALL BE CEMENT-LINED, CLASS 52 PIPE, FURNISHED WITH SEWER COAT, OR APPROVED EQUAL.
9. WHERE SANITARY SEWER LATERALS ARE GREATER THAN 10' DEEP AT CONNECTION TO THE SEWER MAIN, CONCRETE DEEP LATERAL CONNECTIONS ARE TO BE UTILIZED.
10. LOCATION & LAYOUT OF GAS, ELECTRIC & TELECOMMUNICATION UTILITY LINES AND SERVICES SHOWN ON THESE PLANS ARE SCHEMATIC IN NATURE. ACTUAL LOCATION & LAYOUT OF THESE UTILITIES & SERVICES ARE TO BE PER THE APPROPRIATE UTILITY PROVIDER.
11. ROOF LEADER COLLECTION PIPING ARE CONCEPTUAL IN NATURE AND ARE NOT FOR CONSTRUCTION. ACTUAL ROOF LEADER COLLECTION PIPING IS TO BE COORDINATED WITH ARCHITECTURAL PLANS FOR EACH INDIVIDUAL BUILDING. ALL ROOF LEADER COLLECTION PIPING SHALL BE SCHEDULE 40 PVC UNLESS OTHERWISE DESIGNATED.
12. ALL SEWER AND WATER FACILITIES SHALL BE CONSTRUCTED IN ACCORDANCE WITH THE REGULATORY AUTHORITY'S RULES AND REGULATIONS.
13. ALL PROPOSED UTILITIES TO BE INSTALLED UNDERGROUND UNLESS OTHERWISE NOTED.
14. MANUFACTURED REINFORCED CONCRETE STORM PIPE TO CONFORM TO ASTM C-76, CLASS III, UNLESS OTHERWISE DESIGNATED. MANUFACTURED REINFORCED CONCRETE ELLIPTICAL STORM PIPE TO CONFORM TO ASTM C-507, CLASS HE-III, UNLESS OTHERWISE DESIGNATED. REINFORCED CONCRETE STORMWATER PIPE TO BE INSTALLED IN ACCORDANCE WITH AMERICAN CONCRETE PIPE ASSOCIATION INSTALLATION GUIDELINES AND MORTAR OR PREFORMED FLEXIBLE JOINT SEALANTS IN ACCORDANCE WITH ASTM C 990 TO BE UTILIZED TO PROVIDE A SILT-TIGHT JOINT. WHERE SPECIFICALLY INDICATED, REINFORCED CONCRETE STORM PIPE JOINTS SHALL BE WATERTIGHT AND CONFORM TO ASTM C-443.
15. HDPE DRAINAGE PIPE SHALL HAVE A SMOOTH WALL INTERIOR WITH ANNULAR EXTERIOR CORRUGATIONS AND CONFORM TO ASTM F2306. SOLID PIPE SHALL HAVE GASKETED WATER-TIGHT JOINTS MEETING THE REQUIREMENTS OF ASTM F2306 AND ASTM D3212. PERFORATED PIPE SHALL HAVE GASKETED SILT-TIGHT JOINTS MEETING THE REQUIREMENTS OF ASTM F2306 AND ASTM F477. HDPE PIPE SHALL BE FROM A MANUFACTURER WHO IS AN EASTERN STATES CONSORTIUM (ESC) QUALIFIED MANUFACTURER OF HDPE PIPE AND INSTALLED IN ACCORDANCE WITH PIPE MANUFACTURE RECOMMENDATIONS.
16. HP DRAINAGE PIPE SHALL HAVE A SMOOTH WALL INTERIOR WITH ANNULAR EXTERIOR CORRUGATIONS AND CONFORM TO ASTM F2736 (12"-30" PIPE) AND ASTM F2881 (36"-60" PIPE). PIPE SHALL HAVE GASKETED WATER-TIGHT JOINTS MEETING THE REQUIREMENTS OF ASTM D3212 AND ASTM F477. FIELD WATERTIGHNESS PERFORMANCE VERIFICATION MAY BE ACCOMPLISHED IN ACCORDANCE WITH ASTM F2487. HP PIPE SHALL BE FROM A MANUFACTURER WHO IS AN EASTERN STATES CONSORTIUM (ESC) QUALIFIED MANUFACTURER OF HP STORM PIPE AND INSTALLED IN ACCORDANCE WITH PIPE MANUFACTURER RECOMMENDATIONS.
17. PIPE LENGTHS ON THIS PLAN HAVE BEEN MEASURED AS THE DISTANCE BETWEEN THE CENTER POINT OF THE 2 CONNECTED STRUCTURES. ACTUAL PHYSICAL PIPE LENGTH FOR INSTALLATION IS EXPECTED TO BE LESS AND SHOULD BE ACCOUNTED FOR BY THE CONTRACTOR ACCORDINGLY.
18. ANY EXCAVATION, REGRADING OR MODIFICATION OF EXISTING SEPTIC AREAS SHALL RECEIVE APPROVAL FROM THE SEWAGE ENFORCEMENT OFFICER OR GOVERNING AGENCY PRIOR TO CONSTRUCTION.

GRADING/UTILITY GRAPHIC LEGEND

EXISTING TITLE LINE (PARCEL IN QUESTION)
EXISTING R.O.W LINE (PARCEL IN QUESTION)
PROPERTY LINE (PARCEL IN QUESTION)
ULTIMATE RIGHT OF WAY LINE
OFF-SITE PROPERTY LINES

FLOOD PLAIN LINE
EXIST. CABLE LINE
PROP. CABLE LINE
EXIST. ELECTRIC LINE
PROP. ELECTRIC LINE
EXIST. FIBER OPTIC LINE
PROP. FIBER OPTIC LINE
EXIST. FUEL LINE
PROP. FUEL LINE
EXIST. OVERHEAD WIRES
PROP. OVERHEAD WIRES
EXIST. TELEPHONE LINE
PROP. TELEPHONE LINE
EXIST. UNDERGROUND ELEC./TELE. SERVICE (NO. & SIZE OF CONDUITS NOT DEFINED)
PROP. UNDERGROUND ELEC./TELE. SERVICE (NO. & SIZE OF CONDUITS NOT DEFINED)
EXIST. WATER LINE
PROP. WATER LINE
EXIST. SANITARY SEWER LINE
PROP. SANITARY SEWER LINE
EXIST. STORM DRAIN LINE
PROP. STORM DRAIN LINE
EXIST. MINOR CONTOUR & ELEVATION
EXIST. MAJOR CONTOUR & ELEVATION
PROP. FINISH GRADE CONTOUR & ELEVATION
EXIST. MONITORING WELL
APPROX. STORMWATER TEST PIT LOCATION
APPROX. BORING LOCATION

× 8.9 EXIST. SPOT ELEVATIONS
× G: 8.90 EXIST. GUTTER ELEV.
× TC: 8.90 EXIST. TOP OF CURB ELEV.
× FF: 8.90 EXIST. FINISH FLOOR ELEV.
× GF: 8.90 EXIST. GARAGE FLOOR ELEV.
EXIST. FIRE HYDRANT
EXIST. WATER VALVE
EXIST. GAS VALVE
EXIST. GAS METER
EXIST. ELECTRIC METER
EXIST. ELECTRIC BOX
EXIST. CLEAN OUT
EXIST. WELL
EXIST. WATER SHUT OFF VALVE
EXIST. TELEPHONE BOX
EXIST. CABLE TV BOX
EXIST. UTILITY POLE
EXIST. GUY WIRE
EXIST. LIGHT POLE
EXIST. BUILDING LIGHT
EXIST. SHOE BOX LIGHT
EXIST. COBRA LIGHT POLE
EXIST. TRAFFIC SIGNAL POLE
EXIST. MANHOLE
EXIST. 'M' INLET
EXIST. 'C' INLET
EXIST. DOUBLE 'M' INLET
EXIST. YARD INLET
EXIST. FLARED END SECTION
EXIST. HEADWALL

G: 000.00 PROP. GRADE SPOT ELEV.
TC: 000.00 G: 000.00 PROP. TOP OF CURB & FINISHED GRADE ELEV.
FF: 000.00 PROP. FINISHED FLOOR ELEV.
TW: 000.00 GL: 000.00 PROP. TOP OF WALL & FINISHED GRADE @ LOW SIDE OF WALL (ACTUAL BOTTOM OF WALL FOOTING TO BE ESTABLISHED BY WALL DESIGNER)
TC: 000.00 GH: 000.00 GL: 000.00 PROP. TOP OF EXTENDED CURB, (GH) FINISHED GRADE @ HIGH SIDE OF EXTENDED CURB & (GL) FINISHED GRADE @ LOW SIDE OF EXTENDED CURB
PROP. DIRECTION OF DRAINAGE FLOW ARROW
PROP. HYDRANT
PROP. WATER VALVE
PROP. GAS VALVE
PROP. STORM CLEANOUT
PROP. SANITARY CLEANOUT
PROP. UTILITY POLE
PROP. AREA LIGHT
PROP. OUTLET CONTROL STRUCTURE
PROP. DRAINAGE MANHOLE
PROP. SANITARY SEWER MANHOLE
PROP. 'M' INLET
PROP. 'C' INLET
PROP. DOUBLE 'M' INLET
PROP. YARD INLET
PROP. FLARED END SECTION
PROP. HEADWALL

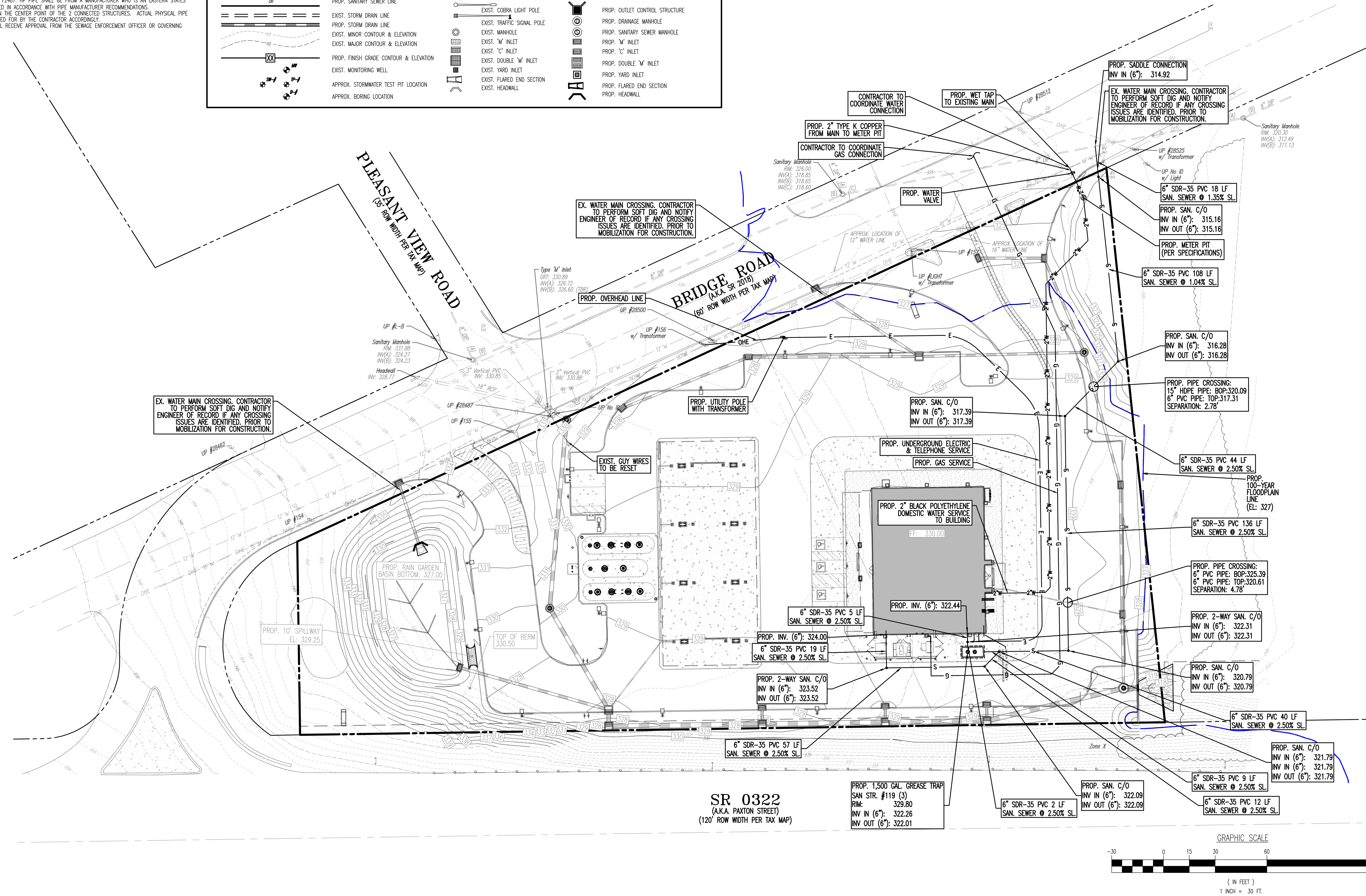

GRAPHIC SCALE

-30 0 15 30 60 120

(IN FEET)
1 INCH = 30 FT.

N W E S

DYNAMIC • ENGINEERING • EARTH • SURVEY • TRAFFIC

REV.	DATE	COMMENTS	BY

THIS PLAN SET IS FOR PERMITTING PURPOSES ONLY AND MAY NOT BE USED FOR CONSTRUCTION

DRAWN BY: LZ
DESIGNED BY: MS
CHECKED BY: MAW
CHECKED BY: –

PROJECT: **SWATARA PAXTON DEVELOPERS LLC**
PROPOSED WAWA FOOD MARKET & FUELING STATION
PARCEL NO. 63-022-037
US ROUTE 322 & BRIDGE ROAD (SR 2018)
TOWNSHIP OF SWATARA, DAUPHIN COUNTY, PENNSYLVANIA

811 Know what's below Call before you dig.
PROTECT YOURSELF
ALL STATES REQUIRE NOTIFICATION OF EXCAVATORS, DESIGNERS, OR ANY PERSON PREPARING TO DISTURB THE EARTH'S SURFACE ANYWHERE IN ANY STATE
FOR STATE SPECIFIC DIRECT PHONE NUMBERS VISIT: WWW.CALL811.COM

DYNAMIC ENGINEERING
LAND DEVELOPMENT CONSULTING • PERMITTING
GEOTECHNICAL • ENVIRONMENTAL
TRAFFIC • SURVEY • PLANNING & ZONING
826 Newtown Yardley Road
Suite 201, Newtown, PA 18940
T: 267.685.0276 | F: 267.685.0361
Offices conveniently located at:
Lake Como, New Jersey • T: 732.974.0198
Chester, New Jersey • T: 908.879.9229
Marlton, New Jersey • T: 856.334.2000
Newark, New Jersey • T: 973.755.7200
Toms River, New Jersey • T: 732.974.0198
Newtown, Pennsylvania • T: 267.685.0276
Philadelphia, Pennsylvania • T: 215.253.4888
Bethlehem, Pennsylvania • T: 610.598.4400
Allen, Texas • T: 972.534.2100
Houston, Texas • T: 281.789.6400
Austin, Texas • T: 512.646.2646
Delray Beach, Florida • T: 561.921.8570
Annapolis, Maryland • T: 410.567.5000
www.dynamicec.com

JUSTIN A. GEONNOTTI
PROFESSIONAL ENGINEER
PENNSYLVANIA LICENSE No. 080629

MARK A. WHITAKER
PROFESSIONAL ENGINEER
NEW JERSEY LICENSE No. 41417

TITLE:
UTILITY PLAN

SCALE: (H) 1"=30' (V)
DATE: 11/21/2023
PROJECT No: 1478-99-212

Plotted: 11/22/23 – 12:42 PM, By: ajwright
File: P:\DECPC PROJECTS\1478 Paramount Realty\99-212 Swatara PA\Dwg\Land Dev Plans\D1478992125U0.dwg, ---> 09 UTILITY PLAN

COPYRIGHT © 2023 – DYNAMIC ENGINEERING CONSULTANTS, PC – ALL RIGHTS RESERVED

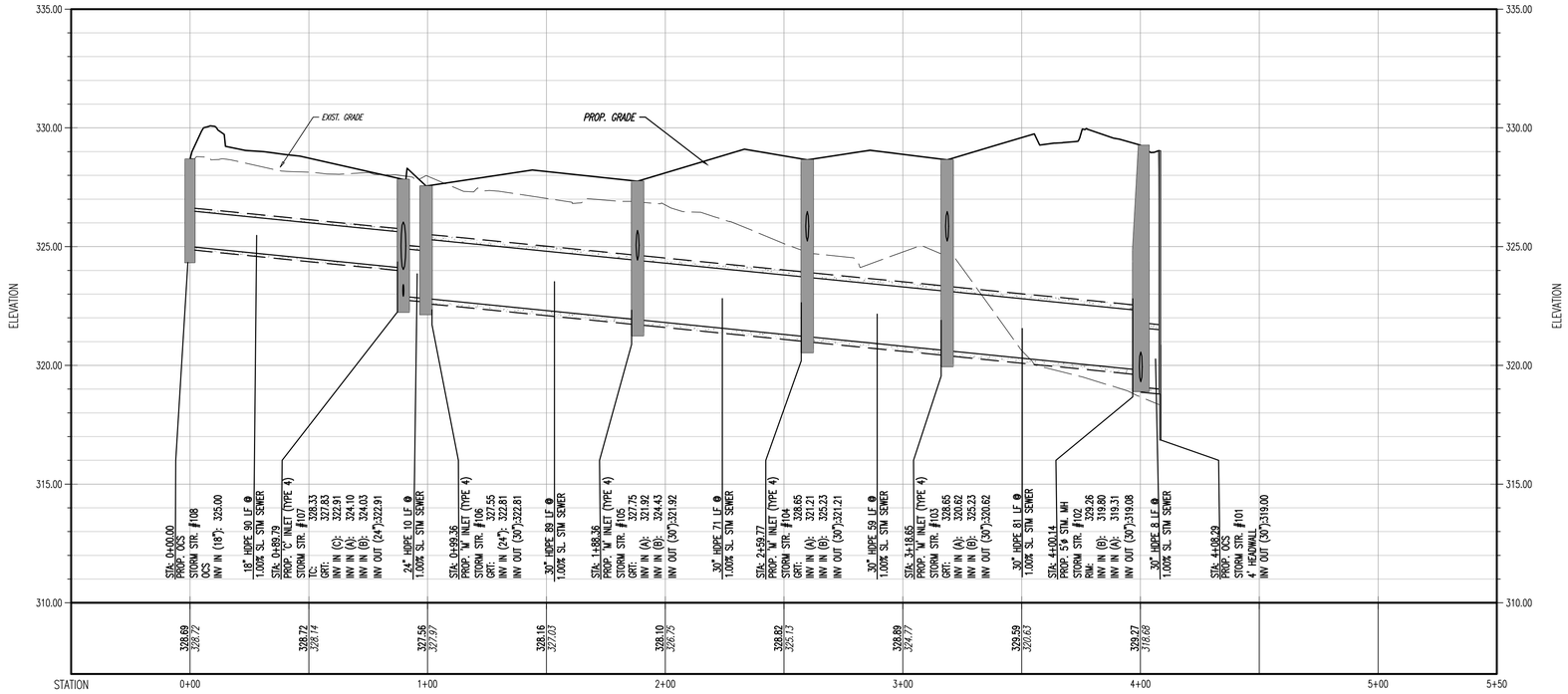

PROFILE VIEW OF OCS STR. #108 TO HW #101
HORIZONTAL SCALE: 1"=30'
VERTICAL SCALE: 1"=3'

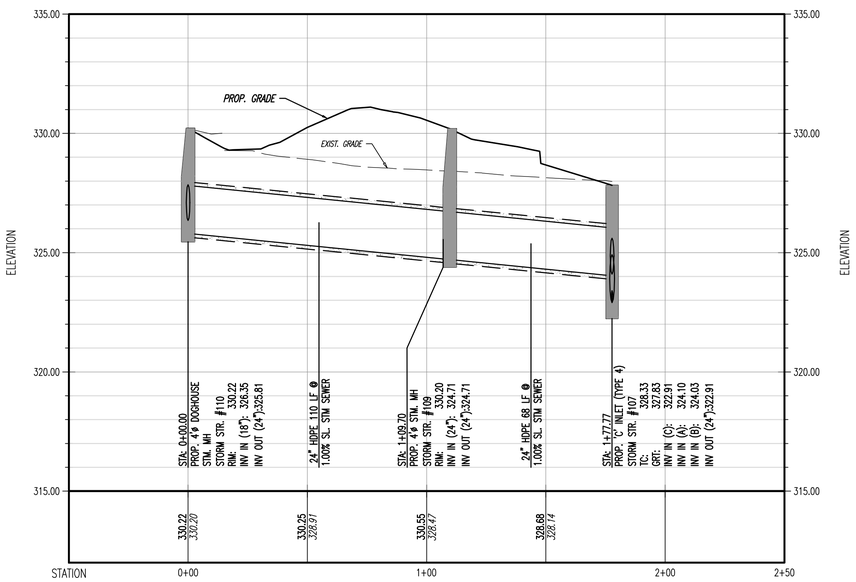

PROFILE VIEW OF DOGHOUSE STM. MANHOLE #110 TO 'C' INLET #107
HORIZONTAL SCALE: 1"=30'
VERTICAL SCALE: 1"=3'

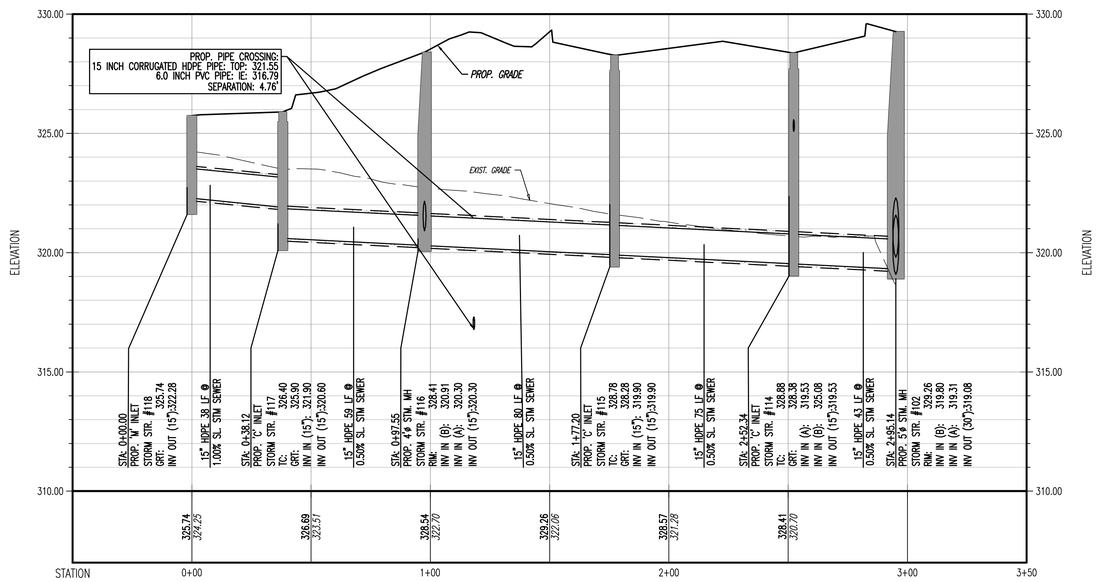

PROFILE VIEW OF 'M' INLET #118 TO STM. MANHOLE #102
HORIZONTAL SCALE: 1"=30'
VERTICAL SCALE: 1"=3'

Plotted: 11/22/23 – 12:43 PM, By: ojwright
File: P:\DECPC PROJECTS\1478 Paramount Realty\99-212 Swatara PA\Dwg\Land Dev Plans\D1478992123XP.dwg, ---> 10 STORM PROFILES

COPYRIGHT © 2023 – DYNAMIC ENGINEERING CONSULTANTS, PC – ALL RIGHTS RESERVED

DYNAMIC
ENGINEERING CONSULTANTS, PC
SURVEY • TRAFFIC

REV.	DATE	COMMENTS	BY

THIS PLAN SET IS FOR PERMITTING PURPOSES ONLY AND MAY NOT BE USED FOR CONSTRUCTION

DRAWN BY: NJS | DESIGNED BY: MS | CHECKED BY: MAW | CHECKED BY: –

PROJECT: **SWATARA PAXTON DEVELOPERS LLC**
PROPOSED WAWA FOOD MARKET & FUELING STATION
PARCEL NO. 63-022-037
US ROUTE 322 & BRIDGE ROAD (SR 2018)
TOWNSHIP OF SWATARA, DAUPHIN COUNTY, PENNSYLVANIA

811 Know what's below. Call before you dig.
PROTECT YOURSELF
ALL STATES REQUIRE NOTIFICATION OF EXCAVATORS, DESIGNERS, OR ANY PERSON PREPARING TO DISTURB THE EARTH'S SURFACE ANYWHERE IN ANY STATE
FOR STATE SPECIFIC DIRECT PHONE NUMBERS VISIT: WWW.CALL811.COM

DYNAMIC ENGINEERING
LAND DEVELOPMENT CONSULTING • PERMITTING
GEOTECHNICAL • ENVIRONMENTAL
TRAFFIC • SURVEY • PLANNING & ZONING
826 Newtown Yardley Road
Suite 201, Newtown, PA 18940
T: 267.685.0276 | F: 267.685.0361
Offices conveniently located at:
Lake Como, New Jersey • T: 732.974.0198
Chester, New Jersey • T: 908.879.9229
Montvale, New Jersey • T: 855.334.2000
Neptune, New Jersey • T: 973.735.7202
Toms River, New Jersey • T: 732.974.0198
Nanticoke, Pennsylvania • T: 267.685.0276
Philadelphia, Pennsylvania • T: 215.203.4888
Bethlehem, Pennsylvania • T: 610.398.4400
Allen, Texas • T: 972.334.2100
Houston, Texas • T: 281.799.4400
Austin, Texas • T: 512.244.7642
Delray Beach, Florida • T: 561.712.8370
Annapolis, Maryland • T: 410.547.5000
www.dynamicec.com

JUSTIN A. GEONNOTTI
PROFESSIONAL ENGINEER
PENNSYLVANIA LICENSE No. 080629

MARK A. WHITAKER
PROFESSIONAL ENGINEER
NEW JERSEY LICENSE No. 41417

TITLE: **STORM PROFILES**

SCALE: (H) 1"=30' (V) 1"=3' | DATE: 11/21/2023
PROJECT No: 1478-99-212

SHEET No: **10** OF 34 | Rev. #: 0

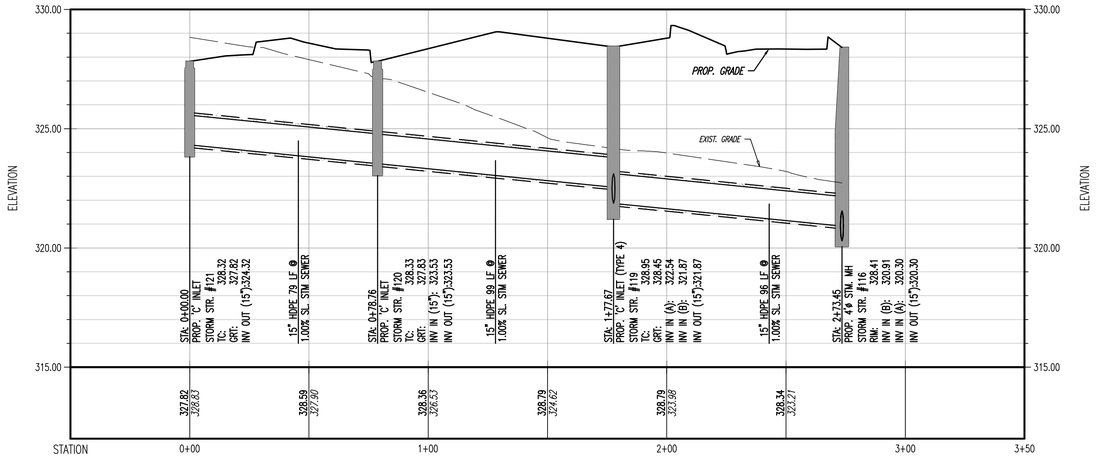

PROFILE VIEW OF 'C' INLET #121 TO STM. MANHOLE #116
HORIZONTAL SCALE: 1"=30'
VERTICAL SCALE: 1"=3'

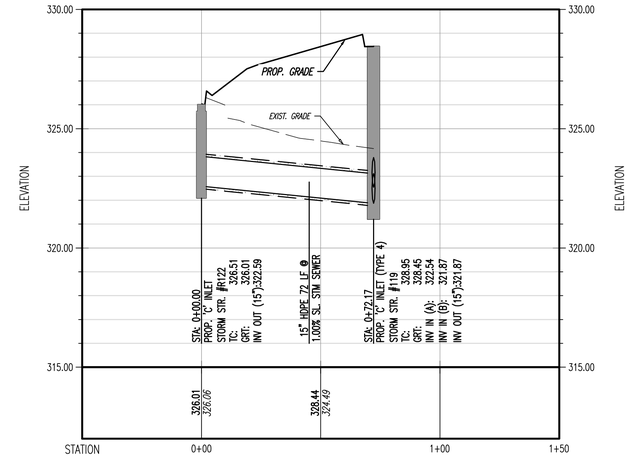

PROFILE VIEW OF 'C' INLET #R122 TO 'C' INLET #119
HORIZONTAL SCALE: 1"=30'
VERTICAL SCALE: 1"=3'

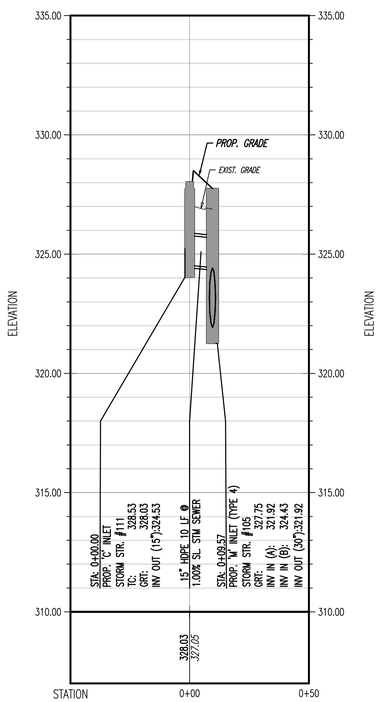

PROFILE VIEW OF 'C' INLET #111 TO 'M' INLET #105
HORIZONTAL SCALE: 1"=30'
VERTICAL SCALE: 1"=3'

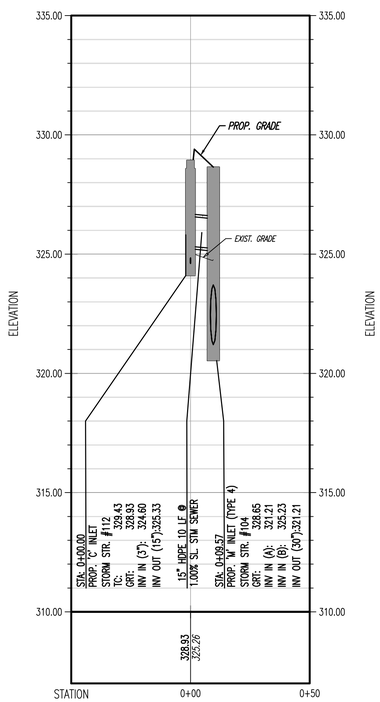

PROFILE VIEW OF 'C' INLET #112 TO 'M' INLET #104
HORIZONTAL SCALE: 1"=30'
VERTICAL SCALE: 1"=3'

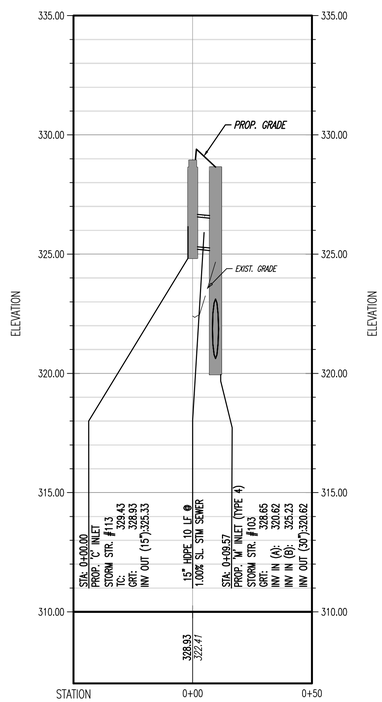

PROFILE VIEW OF 'C' INLET #113 TO 'M' INLET #103
HORIZONTAL SCALE: 1"=30'
VERTICAL SCALE: 1"=3'

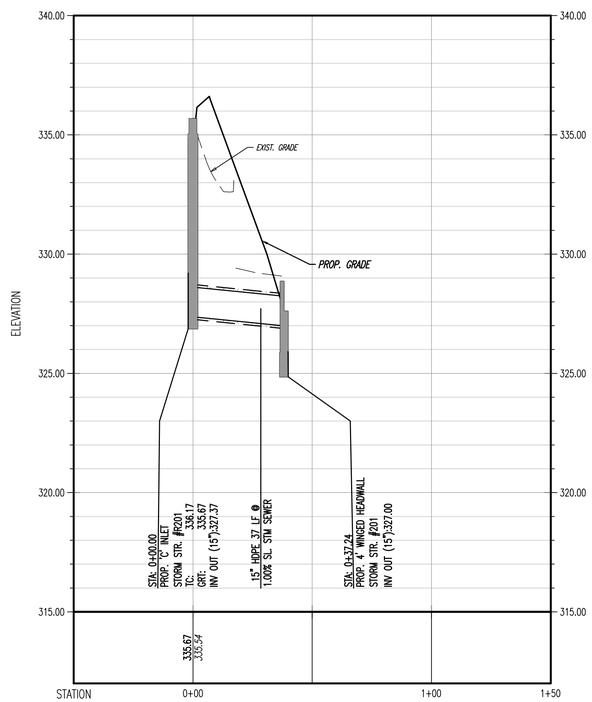

PROFILE VIEW OF 'C' INLET #R201 TO WINGED HW #201
HORIZONTAL SCALE: 1"=30'
VERTICAL SCALE: 1"=3'

Plotted: 11/22/23 – 12:43 PM, By: ajwright
File: P:\DECPC PROJECTS\1478 Paramount Realty\99-212 Swatara PA\Dwg\Land Dev Plans\D1478992125XP.dwg, ----> 11 STORM PROFILES

COPYRIGHT © 2023 – DYNAMIC ENGINEERING CONSULTANTS, PC – ALL RIGHTS RESERVED

DYNAMIC
ENGINEERING CONSULTANTS, INC.
EARTH · SURVEY · TRAFFIC

REV.	DATE	COMMENTS	BY

THIS PLAN SET IS FOR PERMITTING PURPOSES ONLY AND MAY NOT BE USED FOR CONSTRUCTION

DRAWN BY: NJS | DESIGNED BY: MS | CHECKED BY: MAW | CHECKED BY: –

PROJECT: **SWATARA PAXTON DEVELOPERS LLC**
PROPOSED WAWA FOOD MARKET & FUELING STATION
PARCEL NO. 63-022-037
US ROUTE 322 & BRIDGE ROAD (SR 2018)
TOWNSHIP OF SWATARA, DAUPHIN COUNTY, PENNSYLVANIA

811 Know what's below. Call before you dig.
PROTECT YOURSELF
ALL STATES REQUIRE NOTIFICATION OF EXCAVATORS, DESIGNERS, OR ANY PERSON PREPARING TO DISTURB THE EARTH'S SURFACE ANYWHERE IN ANY STATE
FOR STATE SPECIFIC DIRECT PHONE NUMBERS VISIT: WWW.CALL811.COM

DYNAMIC ENGINEERING
LAND DEVELOPMENT CONSULTING • PERMITTING
GEOTECHNICAL • ENVIRONMENTAL
TRAFFIC • SURVEY • PLANNING & ZONING
826 Newtown Yardley Road
Suite 201, Newtown, PA 18940
T: 267.685.0276 | F: 267.685.0361
Offices conveniently located at:
Lake Como, New Jersey • T: 732.974.0198
Cranford, New Jersey • T: 908.879.9229
Moorestown, New Jersey • T: 856.334.2000
Neptune, New Jersey • T: 973.735.7200
Toms River, New Jersey • T: 732.974.0198
New Castle, Pennsylvania • T: 267.685.0276
Philadelphia, Pennsylvania • T: 215.203.4888
Bethlehem, Pennsylvania • T: 610.398.4400
Allen, Texas • T: 972.334.3100
Houston, Texas • T: 281.799.4400
Kissimmee, Florida • T: 352.644.7914
Delray Beach, Florida • T: 561.972.8370
Annapolis, Maryland • T: 410.567.3000
www.dynamicec.com

JUSTIN A. GEONNOTTI
PROFESSIONAL ENGINEER
PENNSYLVANIA LICENSE No. PE080629

MARK A. WHITAKER
PROFESSIONAL ENGINEER
NEW JERSEY LICENSE No. 41417

TITLE: STORM PROFILES

SCALE: (H) 1"=30' (V) 1"=3'
DATE: 11/21/2023
PROJECT No: 1478-99-212

SHEET No: 11 OF 34
Rev. #: 0

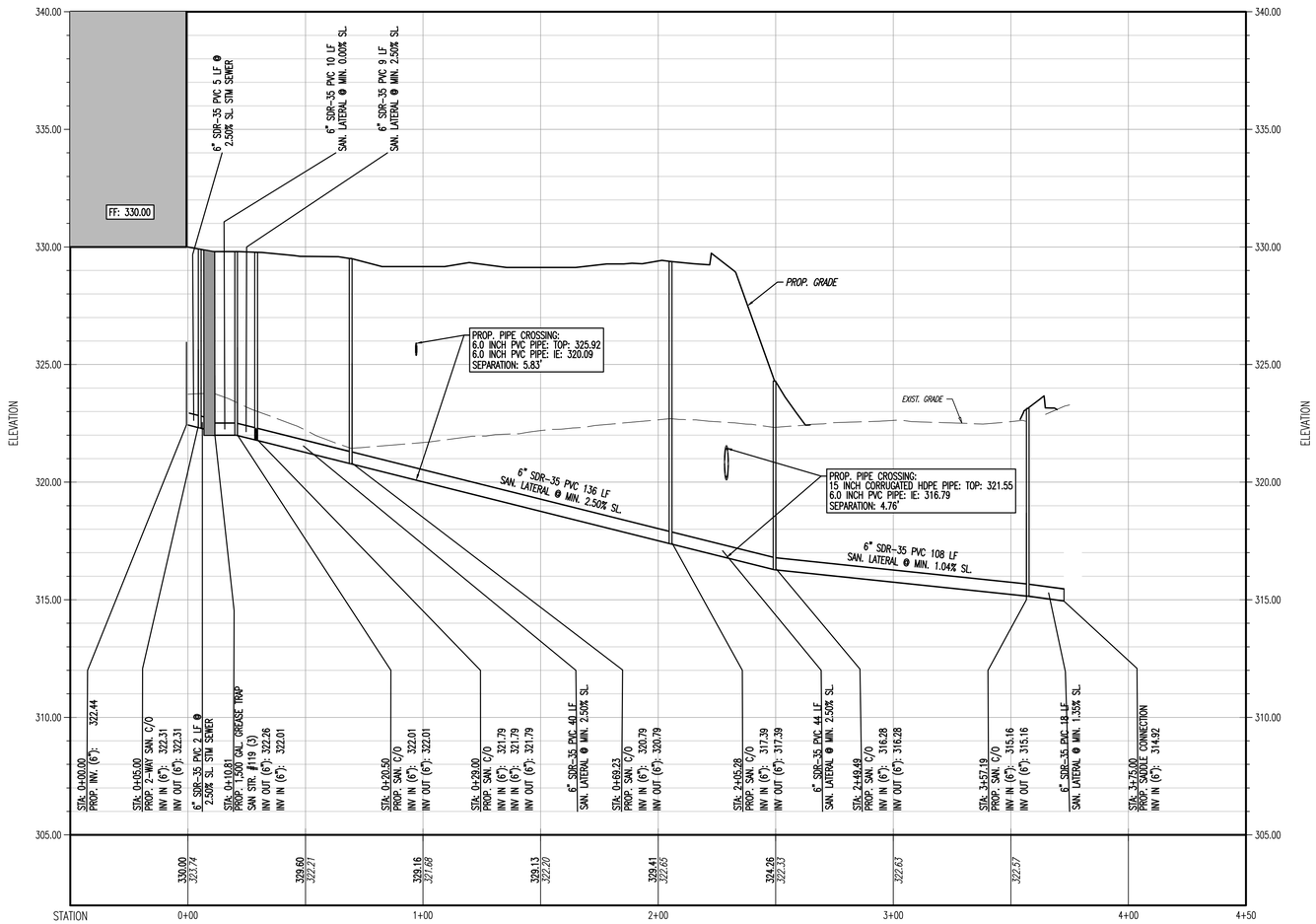

PROFILE VIEW OF BUILDING TO SADDLE CONNECTION
HORIZONTAL SCALE: 1"=30'
VERTICAL SCALE: 1"=3'

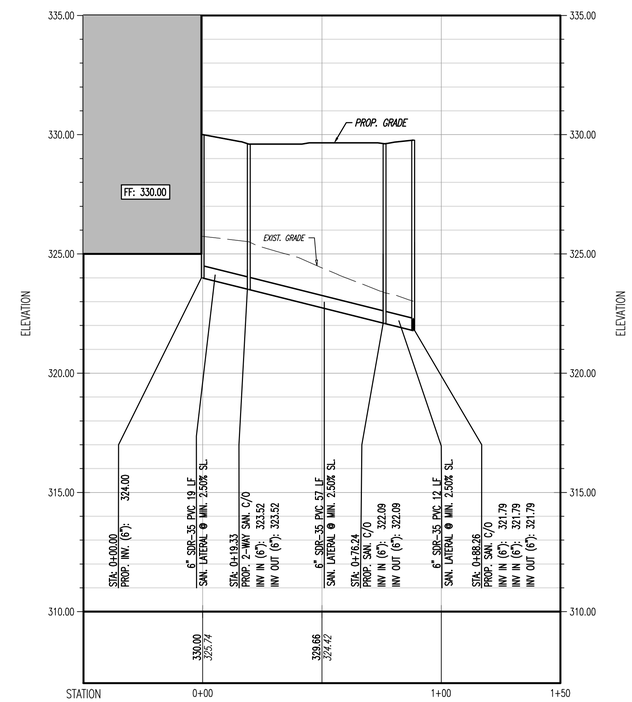

PROFILE VIEW OF BUILDING TO SAN. CO
HORIZONTAL SCALE: 1"=30'
VERTICAL SCALE: 1"=3'

Plotted: 11/22/23 – 12:43 PM, By: ajwright
File: P:\DEPC PROJECTS\1478 Paramount Realty\99-212 Swatara PA\Dwg\Land Dev Plans\D1478992125XP.dwg, ----> 12 SANITARY PROFILES

COPYRIGHT © 2023 – DYNAMIC ENGINEERING CONSULTANTS, PC – ALL RIGHTS RESERVED

DYNAMIC
ENGINEERING CONSULTANTS, PC
SURVEY • TRAFFIC

REV.	DATE	COMMENTS	BY

THIS PLAN SET IS FOR PERMITTING PURPOSES ONLY AND MAY NOT BE USED FOR CONSTRUCTION

DRAWN BY: NJS | DESIGNED BY: MS | CHECKED BY: MAW | CHECKED BY: –

PROJECT: **SWATARA PAXTON DEVELOPERS LLC**
PROPOSED WAWA FOOD MARKET & FUELING STATION
PARCEL NO. 63-022-037
US ROUTE 322 & BRIDGE ROAD (SR 2018)
TOWNSHIP OF SWATARA, DAUPHIN COUNTY, PENNSYLVANIA

811 Know what's below. Call before you dig.
PROTECT YOURSELF
ALL STATES REQUIRE NOTIFICATION OF EXCAVATORS, DESIGNERS, OR ANY PERSON PREPARING TO DISTURB THE EARTH'S SURFACE ANYWHERE IN ANY STATE
FOR STATE SPECIFIC DIRECT PHONE NUMBERS VISIT: WWW.CALL811.COM

DYNAMIC ENGINEERING
LAND DEVELOPMENT CONSULTING • PERMITTING
GEOTECHNICAL • ENVIRONMENTAL
TRAFFIC • SURVEY • PLANNING & ZONING
826 Newtown Yardley Road
Suite 201, Newtown, PA 18940
T: 267.685.0276 | F: 267.685.0361
Offices conveniently located at:
Lake Ronkonkoma, New York • T: 631.737.1700
Clifton, New Jersey • T: 973.777.7225
Midtown, New Jersey • T: 973.777.7225
Newark, New Jersey • T: 973.777.7225
Toms River, New Jersey • T: 732.914.0188
Newtown, Pennsylvania • T: 267.685.0276
Philadelphia, Pennsylvania • T: 215.203.4888
Bethlehem, Pennsylvania • T: 610.398.4400
Allen, Texas • T: 972.324.3100
Houston, Texas • T: 281.799.4400
Austin, Texas • T: 512.644.7544
Delray Beach, Florida • T: 561.972.8370
Annapolis, Maryland • T: 410.567.3000
www.dynamicec.com

JUSTIN A. GEONNOTTI
PROFESSIONAL ENGINEER
PENNSYLVANIA LICENSE No. PE-080629

MARK A. WHITAKER
PROFESSIONAL ENGINEER
NEW JERSEY LICENSE No. 41417

TITLE: SANITARY PROFILES

SCALE: (H) 1"=30' (V) 1"=3'
DATE: 11/21/2023
PROJECT No: 1478-99-212

SHEET No: 12 OF 34
Rev. #: 0

THIS PLAN TO BE UTILIZED FOR LIGHTING PURPOSES ONLY

LUMINAIRE LOCATION SUMMARY		
LUM NO.	LABEL	MTG. HT.
1	A1	20.5
2	A1	20.5
3	A1	20.5
4	A1	20.5
5	A1	20.5
6	A2	20.5
7	A3	20.5
8	A3	20.5
9	A4	20.5
10	A4	20.5
11	A4	20.5
12	A4	20.5
13	A4	20.5
14	A4	20.5
15	A4	20.5
16	A4	20.5
17	A4	20.5
18	B1	20.5
19	B1	20.5
20	B1	20.5
21	C	17.11
22	C	17.11
23	C	17.11
24	C	19.32
25	C	19.32
26	C	19.32
27	C	19.32
28	C	19.32
29	C	19.32
30	C	19.32
31	C	19.32
32	C	21.53
33	C	17.11
34	C	17.11
35	C	17.11
36	C	17.11
37	C	17.11
38	C	21.53
39	C	21.53
40	C	21.53
41	C	21.53
42	C	21.53
43	C	21.53
44	C	21.53
45	D1	9
46	D1	9
47	D1	9
48	D1	9
49	D1	9
50	D1	9
51	D1	9
52	D1	9
53	D1	9
54	D1	9
55	S1	9
56	S1	9
57	S2	8.5
58	S2	8.5
59	W1	15
60	W1	15
61	W1	15
62	W1	15
63	W1	15
64	W1	15
65	W1	15
66	W1	15
67	W1	15

LUMINAIRE SCHEDULE										
SYMBOL	QTY	LABEL	ARRANGEMENT	LUMENS	LLF	BUG RATING	WATTS/LUMINAIRE	TOTAL WATTS	MANUFACTURE	CATALOG LOGIC
	5	A1	SINGLE	12019	1.010	B3-U0-G3	134.2	671	Cree Lighting	ARE-EDG-3M-DA-06-E-UL-XX-700-57K
	1	A2	BACK-BACK	12019	1.010	B3-U0-G3	134.2	268.4	Cree Lighting	ARE-EDG-3M-DA-06-E-UL-XX-700-57K
	2	A3	2 @ 90 DEGREES	12019	1.010	B3-U0-G3	134.2	536.8	Cree Lighting	ARE-EDG-3M-DA-06-E-UL-XX-700-57K
	9	A4	SINGLE	8891	1.010	B1-U0-G2	134	1206	CREE, INC.	ARE-EDG-3MB-DA-06-E-UL-XX-700-57K
	3	B1	SINGLE	12678	1.010	B3-U0-G2	134	402	Cree Inc.	ARE-EDG-4M-DA-06-E-UL-XX-700-57K
	24	C	SINGLE	13251	1.010	B3-U0-G1	134	3216	CREE, INC.	CAN-304-SL-RD-06-E-UL-XX-700-57K
	10	D1	SINGLE	1970	1.010	B2-U0-G0	24	240	Cree Lighting	KR6R-20L-935-12-XX + KR6T-SSGC-FF
	2	S1	SINGLE	2659	1.000	B0-U5-G2	20	40	FC/SSL Lighting	FCWS7170-XXX-35K-2500-CRI85-XX-D
	2	S2	SINGLE	2542	1.000	B0-U4-G2	20	40	FC/SSL Lighting	FCWS7168-UNV-35K-2500-CRI85-XX-D
	9	W1	SINGLE	2859	1.010	B0-U0-G1	50	450	CREE INC.	SEC-EDG-4MB-WM-02-E-UL-XX-700-57K

FOOTCANDLE LEVELS CALCULATED AT GRADE USING INITIAL LUMEN VALUES					
LABEL	AVG	MAX	MIN	AVG/MIN	MAX/MIN
CANOPY	37.51	57	15	2.50	3.80
DELIVERY AREA	4.73	6.1	3.3	1.43	1.85
ENTRANCES & EXIT DRIVES	3.31	5.6	1.4	2.36	4.00
PARKING AREA & INTERIOR DRIVE AI	4.03	11.0	1.0	4.03	11.00
UNDEFINED	0.84	7.9	0.0	N.A.	N.A.

LIGHTING GENERAL NOTES

1. THIS LIGHTING PLAN ILLUSTRATES ILLUMINATION LEVELS CALCULATED FROM LABORATORY DATA TAKEN UNDER CONTROLLED CONDITIONS IN ACCORDANCE WITH ILLUMINATING ENGINEERING SOCIETY OF NORTH AMERICA (IESNA) APPROVED METHODS. ACTUAL SITE ILLUMINATION LEVELS AND PERFORMANCE OF LUMINARIES MAY VARY DUE TO VARIATIONS IN WEATHER, ELECTRICAL VOLTAGE, TOLERANCE IN LAMPS, AND OTHER RELATED VARIABLE FIELD CONDITIONS.
2. ALL EXISTING CONDITIONS LIGHTING LEVELS ARE REPRSENTATIVE OF AN APPROXIMATION UTILIZING LABORATORY DATA FOR SIMILAR FIXTURES AND/OR ACTUAL FIELD MEASUREMENTS TAKEN WITH A LIGHT METER. DUE TO FACTORS SUCH AS FIXTURE MAINTENANCE, EQUIPMENT TOLERANCES, WEATHER CONDITIONS, ETC., ACTUAL LIGHTING LEVELS MAY DIFFER AND THE LIGHTING LEVELS DEPICTED ON THIS PLAN SHOULD BE CONSIDERED AS APPROXIMATE.
3. CONDUITS SHALL BE INSTALLED A MINIMUM OF 2 FEET BEHIND GUIDERAIL POSTS.
4. ALL WIRING METHODS AND EQUIPMENT CONSTRUCTION SHALL CONFORM TO THE CURRENT NATIONAL ELECTRICAL CODE.
5. REFER TO ARCHITECTURAL PLANS FOR WIRING DIAGRAM.
6. THIS PLAN IS PREPARED SPECIFICALLY TO ANALYZE THE LIGHTING LEVELS GENERATED BY THE PROPOSED ON-SITE LIGHTING ONLY. EXISTING LIGHT FIXTURES BEYOND THE EXTENTS OF THIS DEVELOPMENT/PROPERTY ARE NOT MODELED IN THIS DESIGN, AND MAY ALTER ACTUAL LIGHT LEVELS AT THE PROPERTY LINES.

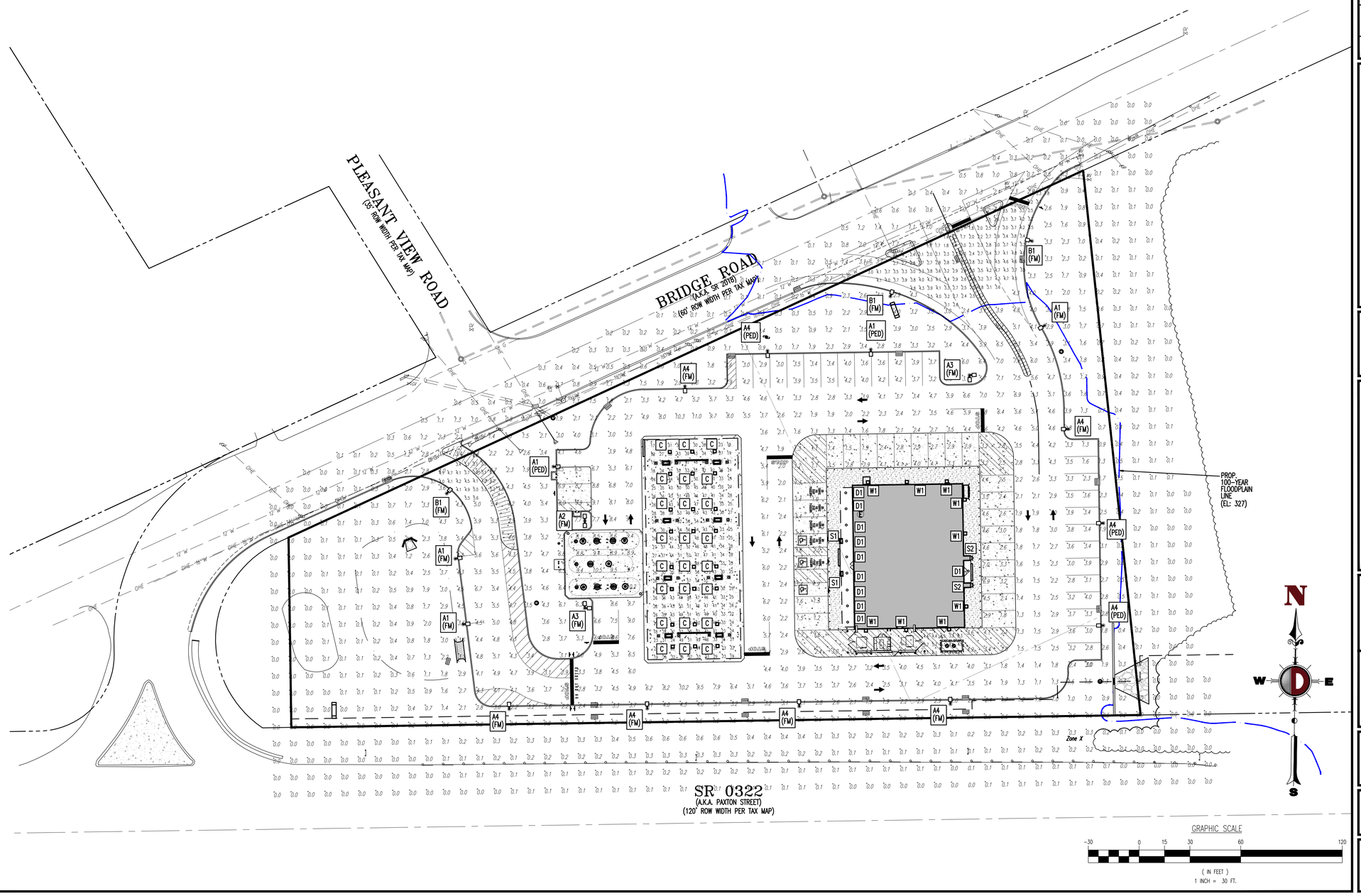

Plotted: 11/22/23 – 12:43 PM, By: djwright
File: P:\DEPC PROJECTS\1478 Paramount Realty\99-212 Swatara PA\Dwg\Land Dev Plans\01478992120S0.dwg, ----> 13 LIGHTING PLAN

COPYRIGHT © 2023 – DYNAMIC ENGINEERING CONSULTANTS, PC – ALL RIGHTS RESERVED

DYNAMIC ENGINEERING CONSULTANTS, PC
DESIGN • ENVIRONMENTAL • SURVEY • TRAFFIC

REV.	DATE	COMMENTS	BY

THIS PLAN SET IS FOR PERMITTING PURPOSES ONLY AND MAY NOT BE USED FOR CONSTRUCTION

DRAWN BY: LZ
DESIGNED BY: MS
CHECKED BY: MAW
CHECKED BY: –

PROJECT: **SWATARA PAXTON DEVELOPERS LLC**
PROPOSED WAWA FOOD MARKET & FUELING STATION
PARCEL NO. 63-022-037
US ROUTE 322 & BRIDGE ROAD (SR 2018)
TOWNSHIP OF SWATARA, DAUPHIN COUNTY, PENNSYLVANIA

811 Know what's below. Call before you dig.
PROTECT YOURSELF
ALL STATES REQUIRE NOTIFICATION OF EXCAVATORS, DESIGNERS, OR ANY PERSON PREPARING TO DISTURB THE EARTH'S SURFACE ANYWHERE IN ANY STATE
FOR STATE SPECIFIC DIRECT PHONE NUMBERS VISIT: WWW.CALL811.COM

DYNAMIC ENGINEERING
LAND DEVELOPMENT CONSULTING • PERMITTING
GEOTECHNICAL • ENVIRONMENTAL
TRAFFIC • SURVEY • PLANNING & ZONING
826 Newtown Yardley Road
Suite 201, Newtown, PA 18940
T: 267.685.0276 | F: 267.685.0361
Offices conveniently located at:
Lumberton, New Jersey • T: 609.714.0778
Cherry Hill, New Jersey • T: 856.679.9229
Wallington, New Jersey • T: 856.334.2000
Newark, New Jersey • T: 973.735.7200
Toms River, New Jersey • T: 732.914.0199
Newtown, Pennsylvania • T: 267.685.0276
Philadelphia, Pennsylvania • T: 215.232.4888
Bethlehem, Pennsylvania • T: 610.398.4400
Allen, Texas • T: 972.534.2100
Houston, Texas • T: 281.799.4400
Kailua, Hawaii • T: 303.944.7954
Delray Beach, Florida • T: 561.972.8370
Annapolis, Maryland • T: 410.647.5000
www.dynamicec.com

JUSTIN A. GEONNOTTI
PROFESSIONAL ENGINEER
PENNSYLVANIA LICENSE No. 080629

MARK A. WHITAKER
PROFESSIONAL ENGINEER
NEW JERSEY LICENSE No. 41417

TITLE:
LIGHTING PLAN

SCALE: (H) 1"=30' (V)
DATE: 11/21/2023
PROJECT No: 1478-99-212

SHEET No: 13 OF 34
Rev. #: 0

THIS PLAN TO BE UTILIZED FOR LIGHTING PURPOSES ONLY

AREA		QTY	LABEL	DESCRIPTION
	green	5	A1	ARE-EDG-3M-DA-06-E-UL-XX-700-57K
	green	1	A2	ARE-EDG-3M-DA-06-E-UL-XX-700-57K
	green	2	A3	ARE-EDG-3M-DA-06-E-UL-XX-700-57K
	blue	9	A4	ARE-EDG-3MB-DA-06-E-UL-XX-700-57K
	magenta	3	B1	ARE-EDG-4M-DA-06-E-UL-XX-700-57K

ADDITIONAL FIXTURE INFO

CANOPY		QTY	LABEL	DESCRIPTION
	red	24	C	CAN-304-SL-RD-06-E-UL-XX-700-57K

ADDITIONAL FIXTURE INFO

SLOPE ADAPTER

DOWNLIGHT		QTY	LABEL	DESCRIPTION
	orange	10	D1	KR6R-20L-935-12-XX + KR6T-SSGC-FF

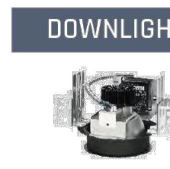

ADDITIONAL FIXTURE INFO

THE EDGE® Series

LED Area/Flood Luminaire

Rev. Date: V12 02/08/2023

Product Description

THE EDGE® Series has a slim, low profile design. Its rugged cast aluminum housing minimizes wind load requirements and features an integral, weathertight LED driver compartment and high performance aluminum heat sinks. Various mounting choices: Adjustable Arm, Direct Arm, Direct Arm Long, or Side Arm (details on page 2). Includes a leaf/debris guard.

Applications: Parking lots, walkways, campuses, car dealerships, office complexes, and internal roadways

Performance Summary

- Patented NanoOptic® Product Technology
- Assembled in the USA by Cree Lighting from US and imported parts
- **CRI:** Minimum 70 CRI (4000K & 5700K); 80 CRI (3000K); 90 CRI (5000K)
- **CCT:** Turtle Friendly Amber, 3000K (+/- 300K), 4000K (+/- 300K), 5000K (+/- 500K), 5700K (+/- 500K) standard
- **Limited Warranty†:** 10 years on luminaire/10 years on Colorfast DeltaGuard® finish/5 years on PML sensors/1 year on accessories

† See http://creelighting.com/warranty for warranty terms

DA Mount

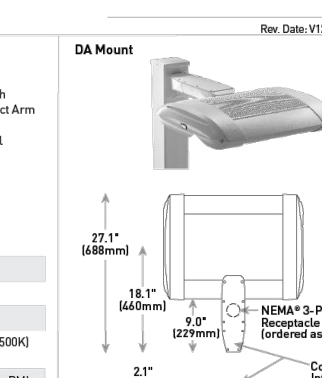

LED Count (x10)	Dim. "A"	Weight
02	12.1" (306mm)	21 lbs. (10kg)
04	12.1" (306mm)	24 lbs. (11kg)
06	14.1" (357mm)	27 lbs. (12kg)
08	16.1" (408mm)	28 lbs. (13kg)
10	18.1" (459mm)	32 lbs. (15kg)
12	20.1" (510mm)	34 lbs. (15kg)
14	22.1" (560mm)	37 lbs. (17kg)
16	24.1" (611mm)	41 lbs. (19kg)

AA/DL/SA Mount - see page 22 for weight & dimensions

Accessories

Field-Installed	
Bird Spikes XA-BRDSPK **Hand-Held Remote** XA-SENSREM - For successful implementation of the programmable multi-level option, a minimum of one hand-held remote is required	**Backlight Control Shields** XA-20BLS-4 - Four-pack - Unpainted stainless steel **Shorting Cap** XA-XSLSHRT **NEMA® 3-Pin Photocell** C-ACC-A-PCELL-NEMA3-LV - On/off functionality only - Available with UL voltage only

Ordering Information

Example: ARE-EDG-2M-AA-12-E-UL-SV-350

Product	Optic	Mounting*	LED Count (x10)	Series	Voltage	Color Options	Drive Current	Options
ARE-EDG	2M Type II Medium 2MB Type II Medium w/BLS 2MP Type II Medium w/ Partial BLS 3M Type III Medium 3MB Type III Medium w/BLS 3MP Type III Medium w/Partial BLS 4M Type IV Medium 4MB Type IV Medium w/BLS 4MP Type IV Medium w/Partial BLS 5M Type V Medium 5S Type V Short	AA Adjustable Arm DA Direct Arm DL Direct Long Arm	02 04 06 08 10 12 14 16	E	UL Universal 120-277V UH Universal 347-480V	BK Black BZ Bronze SV Silver WH White	350 350mA 525 525mA 700 700mA - Available with 20-60 LEDs	DIM 0-10V Dimming - Control by others - Refer to Dimming spec sheet for details - Can't exceed specified drive current - Not available with PML options F Fuse - Compatible only with 120V, 277V or 347V (phase to neutral) - Consult factory if fusing is required for 208V, 240V or 480V (phase to phase) - Refer to PML spec sheet for availability with PML options - When code dictates fusing, use time delay fuse HL Hi/Low (Dual Circuit Input) - Refer to HL spec sheet for details - Sensor not included P Photocell - Refer to PML spec sheet for availability with PML options - Available with UL voltage only PML Programmable Multi-Level, 20-40' Mounting Height - Refer to PML spec sheet for details - Intended for downlight applications at 0° tilt PML2 Programmable Multi-Level, 10-30' Mounting Height - Refer to PML spec sheet for details - Intended for downlight applications at 0° tilt R NEMA® 3-Pin Photocell Receptacle - 3-pin receptacle per ANSI C136.10 - Not available with SA mount - Intended for downlight applications with maximum 45° tilt - Requires photocell or shorting cap by others - Refer to PML spec sheet for availability with PML options 30K 3000K Color Temperature - Minimum 80 CRI - Color temperature per luminaire 40K 4000K Color Temperature - Minimum 70 CRI - Color temperature per luminaire 50K 5000K Color Temperature - Minimum 90 CRI - Color temperature per luminaire TRL Amber Turtle Friendly LEDs - Available only with 350mA - 600nm dominant wavelength - Additional shielding (by others) may be required for Florida Fish and Wildlife Conservation Commission compliance
FLD-EDG	25 25° Flood 40 40° Flood 70 70° Flood SN Sign N6 NEMA® 6	AA Adjustable Arm SA Side Arm - Available with 20-60 LEDs						

* Reference EPA and pole configuration suitability data beginning on page 19

CREE LIGHTING

US: creelighting.com (800) 236-6800
Canada: creelighting-canada.com (800) 473-1234

THE EDGE® LED Area/Flood Luminaire

Product Specifications

CONSTRUCTION & MATERIALS

- Slim, low profile, minimizing wind load requirements
- Luminaire sides are rugged die cast aluminum with integral, weathertight LED driver compartment and high performance heat sinks
- DA and DL mount utilizes convenient interlocking mounting method. Mounting is rugged die cast aluminum, mounts to 3-6" (76-152mm) square or round pole and secures to pole with 5/16-18 UNC bolts spaced on 2" (51mm) centers
- AA and SA mounts are rugged die cast aluminum and mount to 2" (51mm) IP, 2.375" (60mm) O.D. tenons
- Includes leaf/debris guard
- Exclusive Colorfast DeltaGuard® finish features an E-Coat epoxy primer with an ultra-durable powder topcoat, providing excellent resistance to corrosion, ultraviolet degradation and abrasion. Black, bronze, silver, and white are available
- **Weight:** See Dimensions and Weight Charts on pages 1 and 22

ELECTRICAL SYSTEM

- **Input Voltage:** 120-277V or 347-480V, 50/60Hz, Class 1 drivers
- **Power Factor:** > 0.9 at full load
- **Total Harmonic Distortion:** < 20% at full load
- DA and DL mounts designed with integral weathertight electrical box with terminal strips (12Ga-20Ga) for easy power hookup
- Integral 10kV/5kA surge suppression protection standard
- When code dictates fusing, a slow blow fuse or type C/D breaker should be used to address inrush current
- **Maximum 10V Source Current:** 20 LED (350mA): 10mA; 20 LED (525 & 700mA) and 40-80 LED: 0.15mA; 100-160 LED: 0.30mA

REGULATORY & VOLUNTARY QUALIFICATIONS

- cULus Listed
- Suitable for wet locations
- Enclosure rated IP66 per IEC 60529 when ordered without P or R options
- Consult factory for CE Certified products
- Certified to ANSI C136.31-2001, 3G bridge and overpass vibration standards when ordered with AA, DA and DL mounts
- ANSI C136.2 10kV/5kA surge protection, tested in accordance with IEEE/ANSI C62.41.2
- Meets FCC Part 15, Subpart B, Class A limits for conducted and radiated emissions
- Luminaire and finish endurance tested to withstand 5,000 hours of elevated ambient salt fog conditions as defined in ASTM Standard B 117
- RoHS compliant. Consult factory for additional details
- Assembled in the USA by Cree Lighting from US and imported parts
- Meets Buy American requirements within ARRA
- CA RESIDENTS WARNING: Cancer and Reproductive Harm – www.p65warnings.ca.gov

Electrical Data*

LED Count (x10)	CCT	System Watts 120-480V	120V	208V	240V	277V	347V	480V
350mA								
02	30K/40K/50K/57K	25	0.21	0.13	0.11	0.10	0.08	0.07
02	TRL	19	0.16	0.09	0.08	0.07	0.05	0.04
04	30K/40K/50K/57K	46	0.36	0.23	0.21	0.20	0.15	0.12
04	TRL	35	0.29	0.17	0.15	0.13	0.10	0.07
06	30K/40K/50K/57K	66	0.52	0.31	0.28	0.26	0.20	0.15
06	TRL	50	0.41	0.24	0.21	0.18	0.14	0.10
08	30K/40K/50K/57K	90	0.75	0.44	0.38	0.34	0.26	0.20
08	TRL	68	0.57	0.33	0.28	0.25	0.20	0.14
10	30K/40K/50K/57K	110	0.92	0.53	0.47	0.41	0.32	0.24
10	TRL	83	0.69	0.40	0.35	0.30	0.24	0.17
12	30K/40K/50K/57K	130	1.10	0.63	0.55	0.48	0.38	0.28
12	TRL	99	0.82	0.48	0.41	0.36	0.28	0.21
14	30K/40K/50K/57K	158	1.32	0.77	0.68	0.62	0.47	0.35
14	TRL	120	1.00	0.58	0.50	0.43	0.34	0.25
16	30K/40K/50K/57K	179	1.49	0.87	0.77	0.68	0.53	0.39
16	TRL	136	1.13	0.65	0.57	0.49	0.39	0.28
525mA								
02	30K/40K/50K/57K	37	0.30	0.19	0.17	0.16	0.12	0.10
04	30K/40K/50K/57K	70	0.58	0.34	0.31	0.28	0.21	0.16
06	30K/40K/50K/57K	101	0.84	0.49	0.43	0.38	0.30	0.22
08	30K/40K/50K/57K	133	1.13	0.66	0.58	0.51	0.39	0.28
10	30K/40K/50K/57K	171	1.43	0.83	0.74	0.66	0.50	0.38
12	30K/40K/50K/57K	202	1.69	0.98	0.86	0.77	0.59	0.44
14	30K/40K/50K/57K	232	1.94	1.12	0.98	0.87	0.68	0.50
16	30K/40K/50K/57K	263	2.21	1.27	1.11	0.97	0.77	0.56
700mA								
02	30K/40K/50K/57K	50	0.41	0.25	0.22	0.20	0.15	0.12
04	30K/40K/50K/57K	93	0.78	0.46	0.40	0.36	0.27	0.20
06	30K/40K/50K/57K	134	1.14	0.65	0.57	0.50	0.39	0.29

* Electrical data at 25°C (77°F). Actual wattage may differ by +/- 10% when operating between 120-277V or 347-480V +/- 10%

THE EDGE® Series Ambient Adjusted Lumen Maintenance[1]

Ambient	CCT	Initial LMF	25K hr Reported[2] LMF	50K hr Reported[2] LMF	75K hr Reported[2]/Estimated[3] LMF	100K hr Estimated[3] LMF
5°C (41°F)	30K/40K/50K/57K	1.04	1.03	1.03	1.03[2]	1.03
5°C (41°F)	TRL	1.06	1.06	1.06	1.06[3]	1.06
10°C (50°F)	30K/40K/50K/57K	1.03	1.02	1.02	1.02[2]	1.02
10°C (50°F)	TRL	1.04	1.04	1.04	1.04[3]	1.04
15°C (59°F)	30K/40K/50K/57K	1.02	1.01	1.01	1.01[2]	1.01
15°C (59°F)	TRL	1.03	1.03	1.03	1.03[3]	1.03
20°C (68°F)	30K/40K/50K/57K	1.01	0.99	0.99	0.99[2]	0.99
20°C (68°F)	TRL	1.01	1.01	1.01	1.01[3]	1.01
25°C (77°F)	30K/40K/50K/57K	1.00	0.98	0.98	0.98[2]	0.98
25°C (77°F)	TRL	1.00	1.00	1.00	1.00[3]	1.00

[1] Lumen maintenance values at 25°C (77°F) are calculated per IES TM-21 based on IES LM-80 report data for the LED package and in-situ luminaire testing. Luminaire ambient temperature factors (LATF) have been applied to all lumen maintenance factors. Please refer to the Temperature Zone Reference Document for outdoor average nighttime ambient conditions.
[2] In accordance with IES TM-21, Reported values represent interpolated values based on time durations that are up to 6x the tested duration in the IES LM-80 report for the LED.
[3] Estimated values are calculated and represent time durations that exceed the 6x test duration of the LED.

US: creelighting.com (800) 236-6800
Canada: creelighting-canada.com (800) 473-1234

CREE LIGHTING

304 Series™

LED Recessed Canopy Luminaire

Rev. Date: V7 04/05/2021

Product Description

Luminaire housing is constructed from rugged die cast aluminum components (RS Mount) or die cast and extruded aluminum components (RD Mount). LED driver is mounted in a sealed weathertight center chamber that allows for access from below the fixture. Luminaire mounts directly to the canopy deck and is secured in place with die cast aluminum trim frame. Luminaire housing is provided with factory applied foam gasket that provides a watertight seal between luminaire housing and canopy deck. Suitable for use in single or double skin canopies with 16" (406 mm) wide panels. Designed for canopies of 19-22 gauge (maximum 0.040" (1 mm) thickness).
Applications: Petroleum stations, convenience stores, drive-thru banks and restaurants, retail and grocery

Performance Summary

- Patented NanoOptic® Product Technology
- Assembled in the U.S.A. of U.S. and imported parts
- **CRI:** Minimum 70 CRI
- **CCT:** 4000K (+/- 300K), 5700K (+/- 500K) standard
- **Limited Warranty†:** 10 years on luminaire/10 years on Colorfast DeltaGuard® finish

† See http://creelighting.com/warranty for warranty terms

RS Mount

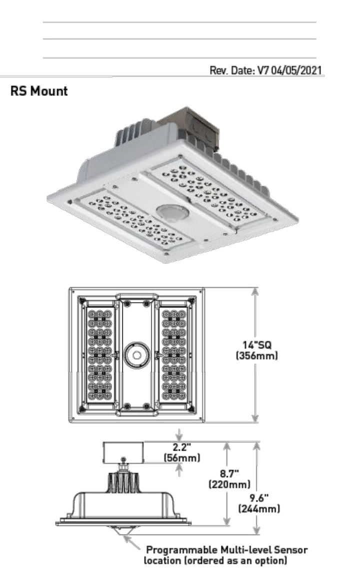

Accessories

Field-Installed
Hand-Held Remote XA-SENSREM - For successful implementation of the programmable multi-level option, a minimum of one hand-held remote is required

Weight
22.0 lbs. (9.9kg)

Ordering Information

Example: CAN-304-5M-RS-04-E-UL-SV-350

Product	Optic	Mounting	LED Count (x10)	Series	Voltage	Color Options	Drive Current	Options
CAN-304	5M Type V Medium 5S Type V Short PS Petroleum Symmetric SL Sparkle Petroleum	RS Recessed Single Skin RD Recessed Double Skin	04 06	E	UL Universal 120-277V UH Universal 347-480V	BK Black BZ Bronze SV Silver WH White	350 350mA 525 525mA 700* 700mA	DIM 0-10V Dimming - Control by others - Refer to Dimming spec sheet for details - Can't exceed specified drive current F Fuse - Compatible only with 120V, 277V or 347V (phase to neutral) - Consult factory if fusing is required for 208V, 240V or 480V (phase to phase) - Refer to PML spec sheet for availability with PML options - When code dictates fusing, use time delay fuse PML Programmable Multi-Level - Refer to PML spec sheet for details 40K 4000K Color Temperature - Minimum 70 CRI - Color temperature per luminaire TRL Amber Turtle Friendly LEDs - Available only with 350mA - Lumen multiplier from 5700K: 0.32 (350mA) - Power multiplier: 0.76 - 600nm dominant wavelength - Additional shielding (by others) may be required for Florida Fish and Wildlife Conservation Commission compliance

* 60 LED luminaire requires marked spacing: 48" x 24" x 6" (1,219mm x 610mm x 152mm); 48" (1,219mm) center-to-center of adjacent luminaires, 24" (610mm) luminaire center to side building member, 6" (152mm) top of luminaire to overhead building member

CREE LIGHTING

US: creelighting.com (800) 236-6800
Canada: creelighting-canada.com (800) 473-1234

304 Series™ LED Recessed Canopy Luminaire

Product Specifications

CONSTRUCTION & MATERIALS

- RS Mount luminaire housing is constructed from rugged die cast aluminum and incorporates integral, high performance heatsink fins specifically designed for LED canopy applications
- RD Mount luminaire housing is constructed from rugged die cast aluminum and features high performance extruded aluminum heatsinks specifically designed for LED canopy applications
- LED driver is mounted in a sealed weathertight center chamber that allows for access from below the luminaire
- Field adjustable drive current between 350mA, 525mA and 700mA on Non-IC rated luminaires
- Luminaire housing provided with factory applied foam gasket and provides for a watertight seal between luminaire housing and canopy deck
- Mounts directly to the canopy deck and is secured in place with a die cast aluminum trim frame
- RS mount includes integral junction box which allows ease of installation without need to open luminaire
- Suitable for use in single (RS Mount) or double (RD Mount) skin canopies with 16" (406mm) wide panels
- Designed for canopies of 19-22 gauge (maximum 0.040" (1mm) thickness)
- See 228 Series™ canopy luminaires for canopies using 12" (305mm) deck sections
- Exclusive Colorfast DeltaGuard® finish features an E-Coat epoxy primer with an ultra-durable powder topcoat, providing excellent resistance to corrosion, ultraviolet degradation and abrasion. Black, bronze, silver, and white are available

ELECTRICAL SYSTEM

- **Input Voltage:** 120-277V or 347-480V, 50/60Hz, Class 1 drivers
- **Power Factor:** > 0.9 at full load
- **Total Harmonic Distortion:** < 20% at full load
- Integral weathertight electrical box with terminal strips (12Ga-20Ga) for easy power hookup
- Integral 10kV surge suppression protection standard
- When code dictates fusing, a slow blow fuse or type C/D breaker should be used to address inrush current
- **10V Source Current:** 0.15mA

REGULATORY & VOLUNTARY QUALIFICATIONS

- cULus Listed
- Suitable for wet locations
- Meets FCC Part 15, Subpart B, Class A limits for conducted and radiated emissions
- Enclosure meets IP66 requirements per IEC 60529
- ANSI C136.2 10kV surge protection, tested in accordance with IEEE/ANSI C62.41.2
- Luminaire and finish endurance tested to withstand 5,000 hours of elevated ambient salt fog conditions as defined in ASTM Standard B 117
- DLC qualified with select SKUs. Please refer to www.designlights.org for most current information
- RoHS Compliant. Consult factory for additional details
- Meets Buy American requirements within ARRA
- CA RESIDENTS WARNING: Cancer and Reproductive Harm – www.p65warnings.ca.gov

Electrical Data*

LED Count (x10)	System Watts 120-480V	120V	208V	240V	277V	347V	480V
350mA							
04	46	0.39	0.24	0.22	0.21	0.15	0.12
06	69	0.57	0.34	0.30	0.27	0.21	0.16
525mA							
04	71	0.59	0.35	0.31	0.28	0.21	0.16
06	101	0.84	0.49	0.43	0.38	0.30	0.22
700mA							
04	94	0.79	0.46	0.40	0.36	0.28	0.21
06	135	1.14	0.65	0.57	0.50	0.40	0.29

* Electrical data at 25°C (77°F). Actual wattage may differ by +/- 10% when operating between 120-277V or 347-480V

304 Series™ Ambient Adjusted Lumen Maintenance[1]

Ambient	CCT	Initial LMF	25K hr Reported[2] LMF	50K hr Reported[2] LMF	75K hr Estimated[3] LMF	100K hr Estimated[3] LMF
5°C (41°F)	30K/40K/50K/57K	1.04	1.01	0.99	0.98	0.96
5°C (41°F)	TRL	1.06	1.06	1.06	1.06	1.06
10°C (50°F)	30K/40K/50K/57K	1.03	1.00	0.98	0.97	0.95
10°C (50°F)	TRL	1.04	1.04	1.04	1.04	1.04
15°C (59°F)	30K/40K/50K/57K	1.02	0.99	0.97	0.96	0.94
15°C (59°F)	TRL	1.03	1.03	1.03	1.03	1.03
20°C (68°F)	30K/40K/50K/57K	1.01	0.98	0.96	0.95	0.93
20°C (68°F)	TRL	1.01	1.01	1.01	1.01	1.01
25°C (77°F)	30K/40K/50K/57K	1.00	0.97	0.95	0.94	0.92
25°C (77°F)	TRL	1.00	1.00	1.00	1.00	1.00

[1] Lumen maintenance values at 25°C (77°F) are calculated per IES TM-21 based on IES LM-80 report data for the LED package and in-situ luminaire testing. Luminaire ambient temperature factors (LATF) have been applied to all lumen maintenance factors. Please refer to the Temperature Zone Reference Document for outdoor average nighttime ambient conditions.
[2] In accordance with IES TM-21, Reported values represent interpolated values based on time durations that are up to 6x the tested duration in the IES LM-80 report for the LED.
[3] Estimated values are calculated and represent time durations that exceed the 6x test duration of the LED.

CREE LIGHTING

US: creelighting.com (800) 236-6800
Canada: creelighting-canada.com (800) 473-1234

KR Series

KR4™ & KR6™ LED Specification Downlights

Rev. Date: V1 09/27/2022

Product Description

The KR Series LED specification downlights deliver beautiful, high-quality light with efficacy up to 90 lumens per watt. Designed for new construction applications, the KR Series is available in a variety of color temperatures, round and square trims with high-quality anodized aluminum reflector finish, a sloped ceiling adapter accessory, and a variety of dimming options. The KR Series downlights with SmartCast® Technology, Cree Lighting's intelligent light solution, provide extreme energy productivity and code compliance – all with installation that's so intuitive and simple, it just works.

Performance Summary

- **Initial Delivered Lumens:** 850-6,750 lumens
- **Input Power:** 13-78 watts
- **Emergency Performance:** Minimum 90 Minutes, 10W (9L-40L) / 20W (60L)
- **CRI:** 90
- **CCT:** 2700K, 3000K, 3500K, 4000K, 5000K
- **Controls:** 0-10V Dimming to 5%, SmartCast® Technology Dimming to 5%, and Lutron EcoSystem® Dimming to 1%, Lutron Vive Dimming to 5%
- **Limited Warranty†:** 10 years for luminaire/up to 5 years for SmartCast® accessories/1 year for luminaire accessories
- **Limited Warranty Emergency Back Up (EB) Battery:** 1 Year Battery Back Up. Test regularly in accordance with local codes
- Assembled in the USA by Cree Lighting from US and imported parts

† See http://creelighting.com/warranty for warranty terms. Consult SmartCast accessory spec sheets for details on warranty terms.

KR4R

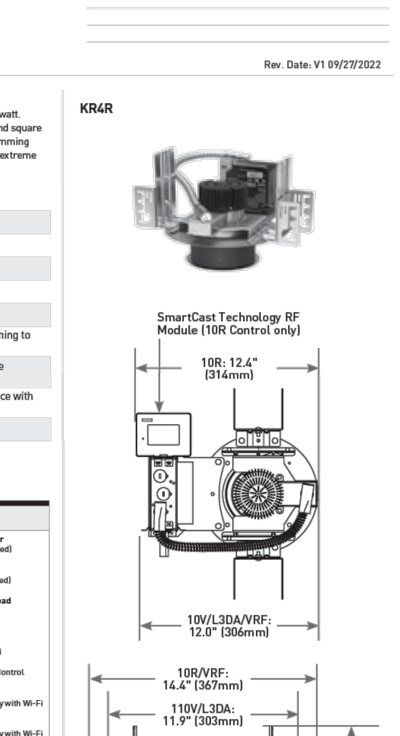

Refer to page 7&8 for additional downlight drawings.

Accessories

Field-Installed		
Sloped Ceiling Adapter KXKS4**WW (4" Round only) KS6**WW (6" Round only) ** 0-35 (order in 5 degree increments) **C-Channel Hanger Bars** RBH30C - Pair of 30" (762mm) rigid 3/4" x 1/2" (19mm x 13mm) C Channel bars RBH24C-1 - Pair of 24" (610mm) x 1-1/2" (38mm) x 1/2" (13mm) standard C-Channel bars **T-Bar Clips** RARC7 - Set of four - For use with RBH24C-1 hanger bars **Beauty Ring** KR4TA (4" Round only) KR6TA (6" Round only) - White beauty ring to cover pan head fasteners on round reflectors	**SmartCast® Technology Configuration Tool** CCT-CWC-1 - One required per project when 10R control is selected **SmartCast® Technology Face Plates** CFP-1-WH - Matching face plate, 1-gang, white CFP-2-WH - Matching face plate, 2-gang, white CFP-3-WH - Matching face plate, 3-gang, white **SmartCast® 5-Button Wireless Scene Controller** CSC-SC-5B-CWC-WH (w/o text) CSC-SC-5S-CWC-WH (w/scene text) CSC-SC-5X-CWC-WH (w/custom text) **SmartCast® 10V Zone Controller** CSC-ZC-10V-CWC - Intelligent sensing and control of 0-10V luminaires	**SmartCast® Technology Wireless Dimmer** CSC-CWD-UNVN-WH (neutral wire required) CSC-CWD-UNV-WH (no neutral required) **SmartCast® Technology Wireless Switch** CSC-CWS-UNVN-WH (neutral wire required) CSC-CWS-UNV-WH (no neutral required) **SmartCast® Technology Wireless Plug Load Controller** CPLC-J8-CWC **SmartCast® Touchscreen Control** CSC-TS-A-BK **SmartCast® Wireless Gateway with Wi-Fi** CSC-GW-CWC-W - Required with SmartCast Touchscreen Control **SmartCast® Wall Plug Power Supply** CSC-WPS-120V - For use with SmartCast Wireless Gateway with Wi-Fi **SmartCast® Ceiling Plug Power Supply** CSC-CPS-120V - For use with SmartCast Wireless Gateway with Wi-Fi

Ordering Information

Fully assembled luminaire is composed of two components that must be ordered separately:
Example: **Housing:** KR4R-20L-935-12-10V + **Reflector:** KR4T-SSGC-FF

Reflector (Housing must be ordered separately)

Series	Reflector Finish	Flange Finish	Options
KR4T 4" Round Trim KR4TS 4" Square Trim KR6T 6" Round Trim KR6TS 6" Square Trim	SSGC Soft Satin Glow, Clear	FF Matches Reflector WF White Paint	WW Wall Wash - For use only with 6" round trims

Housing (Reflector must be ordered separately)

Series	Size	Lumen Package*	CRI/CCT	Voltage	Controls	Options
KR	4R 4" Round 4S 4" Square 6R 6" Round 6S 6" Square	9L 1,000 Lumens, 13W - 77 LPW 13L 1,340 Lumens, 16W - 84 LPW 20L 1,970 Lumens, 24W - 82 LPW 30L 2,810 Lumens, 33W - 85 LPW 40L 3,760 Lumens, 44W - 85 LPW 60L 6,490 Lumens, 75W - 87 LPW - Available only with 6" downlights	927 90 CRI, 2700K 930 90 CRI, 3000K 935 90 CRI, 3500K 940 90 CRI, 4000K 950 90 CRI, 5000K	12 120V 27 277V 34 347V	10V 0-10V Dimming to 5% 10R SmartCast® Wireless Technology with 5% Dimming, Integral Motion and Ambient Sensors - Available only with 9L-30L lumen packages - Available only with 12 & 27 voltages L3DA Lutron EcoSystem® Dimming to 1% - Available only with 13L-40L lumen packages - Available only with 12 & 27 voltages - Minimum operating temperature: 0°C (32°F) VRF Lutron Vive Wireless Integral Fixture Control with Dimming to 5% (RF only) - Available only with 12 & 27 voltages - Minimum operating temperature: 0°C (32°F)	EB Emergency Backup - Available only with 12 & 27 voltages - Provides 90 minutes and 10W (9L-40L) or 20W (60L) of power - Minimum operating temperature: 0°C (32°F)

* Lumen package information based on 35K/40K. Actual lumen output levels vary depending on CCT. Refer to Delivered Lumens & Electrical Data and Reflector Illumination Performance tables for specific lumen values.

SMARTCAST® TECHNOLOGY | EcoSystem. Enabled | vive

CREE LIGHTING

US: creelighting.com T (800) 236-6800
Canada: creelighting-canada.com T (800) 473-1234

KR4™ & KR6™ LED Specification Downlights

Product Specifications

SMARTCAST® TECHNOLOGY

SmartCast® Technology is the most intuitive and easiest to install intelligent light solution on the market. SmartCast Technology delivers up to 70% energy savings at up to half the cost of other solutions. Luminaires combine best-in-class light with onboard sensors and intelligence to deliver a better light experience. Extreme energy productivity, code compliance and a better light experience without any extra design, installation or setup work.

CONSTRUCTION & MATERIAL

- Low brightness parabolic spun Alzak aluminum cone, 0.06" (2mm) thick with polished radius and continuous self-flange
- Soft Satin Glow Clear finish, standard
- 2" (51mm) aperture throat to accommodate all standard and up to 3" (76mm) thick ceilings and provide flexibility in mounting within grid
- Provided with quick mounting brackets for optional carrying channels
- Light engine, optics, and driver accessible from below ceiling
- Beam Angle: ~70° (included angle between points of 50% of maximum intensity)

ELECTRICAL SYSTEM

- **Power Factor:** > 0.9 at full load
- **Total Harmonic Distortion:** < 20% at full load
- **Input Voltage:** 120, 277V, or 347V, 50/60Hz
- **Operating Temperature Range:** -18°C - +40°C (0°F - +104°F); minimum operating temperature with L3DA control or EB option is 0°C (32°F)

CONTROLS

- Continuous dimming to 5% with 0-10V DC control protocol
- 10V Source Current: 9L-40L: 0.2mA (max.); 60L: 0.6mA (max.)
- For use with Class 2 dimming systems only
- Use only lighting controls with neutral connection or controls intended for use with LED fixtures
- Lutron EcoSystem® Dimming to 1%
- SmartCast® Technology Dimming to 5%
- Reference www.creelighting.com/products/indoor/new-constructiondownlights/kr-series for recommended dimming controls and wiring diagrams

REGULATORY & VOLUNTARY QUALIFICATIONS

- cULus Listed
- Suitable for thru-wiring 8#12AWG-90°C
- Suitable for damp locations
- Designed for indoor use only
- Thermally protected Type NON-IC in accordance with Article 410 of the NEC and UL 1598
- Requires minimum 90°C supply conductors
- UL924 (EB option). Maximum mounting height: 9L - 21' (6.4m); 13L - 25' (7.6m); 20L - 26' (7.9m); 30L/40L - 28' (8.5m); 60L - 43' (13.1m)
- Meets FCC Part 15, Subpart B, Class A limits for conducted and radiated emissions
- Pending EnergyStar® certified. Please refer to https:www.energystar.gov/productfinder/product/certified-lightfixtures/ results for most current information
- RoHS compliant. Consult factory for additional details
- Assembled in the USA by Cree Lighting from US and imported parts
- Meets Buy American requirements within ARRA
- CA RESIDENTS WARNING: Cancer and Reproductive Harm – www.p65warnings.ca.gov

SmartCast® Technology

INTEGRAL MOTION SENSOR

- Passive infrared (PIR)
- **Coverage area:** 100 sq. ft. (30.5m2) at 10 ft. (3.0m) mounting height
- Not intended to be mounted higher than 12 ft. (3.7m)
- **Operation:**
  - Grouped with a wall control: Luminaire will operate in vacancy mode (manual on/auto-off)
  - Not grouped with a wall control: Luminare will operate in occupancy mode (auto-on/auto-off)
- Luminaires operate at full intensity until OneButton™ Setup is initiated by the Cree Lighting Configuration Tool

AMBIENT LIGHT SENSOR

- Sensor response matches response of human eye
- Not intended to be mounted higher than 12 ft. (3.7m)
- Luminaires operate at full intensity until OneButton™ Setup is initiated by the Cree Lighting Configuration Tool
- Daylight harvesting calibration performed automatically during OneButton™ Setup

INTEGRAL WIRELESS COMMUNICATION

- 2.4GHz wireless mesh technology with AES 128-bit encryption
- Self assigns to quietest channel during OneButton™ Setup
- **Range:**
  - 30 ft. (9.1m) in typical commercial applications
  - 300 ft. (91.4m) open air without obstructions
- **Network:** 250 devices max.
- **Space:** 100 devices max. per group
- FCC and IC Certifications
- **NOTE:** SmartCast luminaires must be installed on unswitched AC power. Constant power is required to maintain all luminaires on the SmartCast network. If wall control or manual dimming is required, a SmartCast wall control dimmer must be used for manual on, off, and dimming.

LUMINAIRE

- Luminaires operate at full intensity until OneButton™ Setup is initiated by the Cree Lighting Configuration Tool
- 10 year power fail memory of settings

DEPLOYMENT

- Please refer to the SmartCast® Deployment Guide at https://cree.widen.net/s/mvxtfd2pcz/smartcastr-wireless-deployment-guide

Installation - 4"

- Recommended round ceiling cutout: ⌀ 4.75" (120mm)
- Recommended square ceiling cutout: 4.75" x 4.75" (120mm x 120mm)

Note: 30L and 40L versions require marked spacing: 24" (600mm) x 12" (300mm) x ½" (12mm). 24" (600mm) luminaire to luminaire, 12" (300mm) luminaire to side wall, ½" (12mm) above luminaire.

Installation - 6"

- Recommended ceiling cutout: ⌀ 6.5" (165mm)
- Recommended ceiling cutout: 6.5" x 6.5" (165mm x 165mm)

Note: 30L and 40L versions require marked spacing: 24" (600mm) x 12" (300mm) x ½" (12mm). 24" (600mm) luminaire to luminaire, 12" (300mm) luminaire to side wall, ½" (12mm) above luminaire. 60L versions require marked spacing: 48" (1219mm) x 24" (600mm) x 1" (25mm). 48" (1219mm) luminaire to luminaire, 24" (600mm) luminaire to side wall, 1" (25mm) above luminaire.

US: creelighting.com T (800) 236-6800
Canada: creelighting-canada.com T (800) 473-1234

CREE LIGHTING

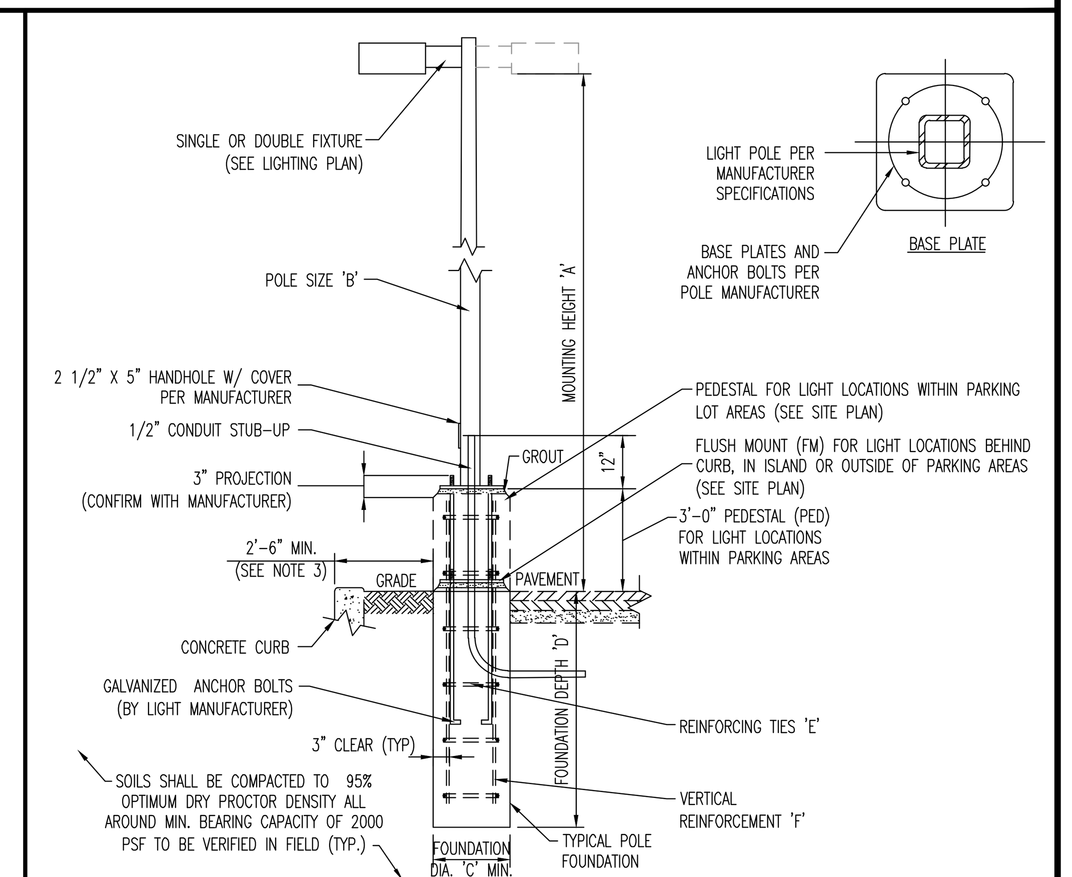

NOTE:
1. CONTRACTOR TO CONFIRM ALL LIGHT POLE & FIXTURE DIMENSIONS PRIOR TO CONSTRUCTION.
2. CONTRACTOR TO PROVIDE ADJUSTED POLE HEIGHT RESULTING IN MOUNTING HEIGHT 'A', TAKING INTO CONSIDERATION PEDESTAL (PED) OR FLUSH MOUNT (FM) FOUNDATION DESIGNATION AT EACH POLE LOCATION.
3. PROPOSED CONCRETE FOUNDATION AND POLE TO BE CONSTRUCTED WITHIN SUBJECT PROPERTY UNLESS OTHERWISE NOTED. SETBACK FROM CURB IS PREFERRED BUT TO BE ADJUSTED AS NEEDED TO PREVENT ENCROACHMENT OVER PROPERTY LINE.
4. BASE PLATE & ANCHOR BOLTS PER POLE MANUFACTURER. LARGER FOOTING DIAMETER AND/OR ALTERNATE ARRANGEMENT OF REINFORCING STEEL MAY BE REQUIRED TO ACCOMMODATE ANCHOR BOLT CONFIGURATION. CONTRACTOR RESPONSIBLE TO COORDINATE DIMENSIONAL REQUIREMENTS FOR BASE PLATE, ANCHOR BOLTS & REINFORCING STEEL PRIOR TO CONSTRUCTION.

LIGHT POLE FOUNDATION SCHEDULE	
MOUNTING HEIGHT ABOVE GRADE 'A'	18'-20'
POLE DIA. 'B'	6" SQUARE (OR PER MANUFACTURER)
# OF FIXTURES	SINGLE OR DOUBLE
FOUNDATION DIAMETER 'C'	18" DIA. ROUND
FOUNDATION DEPTH 'D'	5.5'
REINFORCING TIES 'E'	#4 @ 12" O.C.
VERTICAL REINFORCEMENT 'F'	(6) #6 BARS EQUALLY SPACED

SOIL NOTES
1. FOOTING DESIGN BASED ON ASSUMED MAXIMUM ALLOWABLE SOILS BEARING CAPACITY OF 2,000 PSF. CONTRACTOR RESPONSIBLE TO VERIFY ADEQUACY OF ASSUMED BEARING CAPACITY PRIOR TO CONSTRUCTION. ENGINEER TO BE NOTIFIED IF INCONSISTENCIES EXIST.
2. SUBGRADE TO BE FREE OF ORGANICS AND BE SUITABLE, COMPACTED MATERIAL.

CONCRETE NOTES
1. CONCRETE SHALL HAVE A MINIMUM COMPRESSIVE STRENGTH OF 4,000 PSI AT 28 DAYS WITH A MINIMUM CEMENT CONTENT OF 600 POUNDS PER CUBIC YARD FOR ALL FOOTINGS.
2. ALL CONCRETE SHALL HAVE A SLUMP OF NO GREATER THAN 4" TO WITHIN A TOLERANCE OF 1".
3. ALL EXPOSED CONCRETE SHALL BE AIR-ENTRAINED (WITHIN 1% TOLERANCE), CONFORMING TO ASTM C260.
4. REINFORCING FRAMEWORK AND PLACEMENT OF CONCRETE SHALL COMPLY WITH GOOD CONSTRUCTION PRACTICES AND BE IN ACCORDANCE WITH ALL LOCAL GOVERNING CODES AND REGULATIONS AS WELL AS THE ACI AND UNIFORM BUILDING CODE.

02/2023 - JGJ/DJS

AREA LIGHT FOUNDATION DETAIL

NOT TO SCALE

DYNAMIC • ENGINEERING • EARTH • SURVEY • TRAFFIC

REV.	DATE	COMMENTS	BY

THIS PLAN SET IS FOR PERMITTING PURPOSES ONLY AND MAY NOT BE USED FOR CONSTRUCTION

DRAWN BY: LZ | DESIGNED BY: MS | CHECKED BY: MAW | CHECKED BY: –

PROJECT: SWATARA PAXTON DEVELOPERS LLC
PROPOSED WAWA FOOD MARKET & FUELING STATION
PARCEL NO. 63-022-037
US ROUTE 322 & BRIDGE ROAD (SR 2018)
TOWNSHIP OF SWATARA, DAUPHIN COUNTY, PENNSYLVANIA

811 Know what's below. Call before you dig.
PROTECT YOURSELF
ALL STATES REQUIRE NOTIFICATION OF EXCAVATORS, DESIGNERS, OR ANY PERSON PREPARING TO DISTURB THE EARTH'S SURFACE ANYWHERE IN ANY STATE
FOR STATE SPECIFIC DIRECT PHONE NUMBERS VISIT: WWW.CALL811.COM

DYNAMIC ENGINEERING
LAND DEVELOPMENT CONSULTING • PERMITTING
GEOTECHNICAL • ENVIRONMENTAL
TRAFFIC • SURVEY • PLANNING & ZONING
826 Newtown Yardley Road
Suite 201, Newtown, PA 18940
T: 267.685.0276 | F: 267.685.0361
Offices conveniently located at:
Lake Como, New Jersey • T: 732.974.0198
Chester, New Jersey • T: 908.879.9229
Marlton, New Jersey • T: 856.334.2000
Newark, New Jersey • T: 973.755.7200
Toms River, New Jersey • T: 732.974.0198
Newtown, Pennsylvania • T: 267.685.0276
Philadelphia, Pennsylvania • T: 215.253.4888
Bethlehem, Pennsylvania • T: 610.598.4400
Allen, Texas • T: 972.534.2100
Houston, Texas • T: 281.789.6400
Austin, Texas • T: 512.646.2646
Delray Beach, Florida • T: 561.921.8570
Annapolis, Maryland • T: 410.567.5000
www.dynamicec.com

JUSTIN A. GEONNOTTI
PROFESSIONAL ENGINEER
PENNSYLVANIA LICENSE No. 080629

MARK A. WHITAKER
PROFESSIONAL ENGINEER
NEW JERSEY LICENSE No. 41417

TITLE: LIGHTING NOTES & DETAILS

SCALE: (H) AS (V) SHOWN | DATE: 11/21/2023
PROJECT No: 1478-99-212

SHEET No: 14 OF 34 | Rev. #: 0

Plotted: 11/22/23 – 12:43 PM, By: ajwright
File: P:\DECPC PROJECTS\1478 Paramount Realty\99-212 Swatara PA\Dwg\Land Dev Plans\D1478992125I0.dwg, ---> 14 LIGHTING NOTES & DETAILS

COPYRIGHT © 2023 - DYNAMIC ENGINEERING CONSULTANTS, PC - ALL RIGHTS RESERVED

THIS PLAN TO BE UTILIZED FOR LIGHTING PURPOSES ONLY

	QTY	LABEL	DESCRIPTION
WALL MOUNTED	2	S1	FCWS7170-XXX-35K-2500-CRI85-XX-D

FC OUTDOOR LIGHTING

FCWS7170

Date:	Approved:
Type:	
Fixture:	
Project:	

FCWS7170 Exterior Decor fixture is an IP65 rated, ADA compliant, easy to maintain fixture that has an impact resistant lens and face options to meet the design requirements of your building.

ETL · Title 24 · ADA

SPECIFICATIONS

PHYSICAL	
dimensions	24" H x 7.25" W x 4" Deep
weight	9.25 lbs
housing	Marine grade, corrosion resistant, heavy gauge high pressure die cast aluminum
lens	Impact resistant, UV stabilized, opal, polycarbonate diffuser
mounting	Mounts directly to standard junction box; masonry applications use four (4) 0.25" x 0.75" screws with lead anchors (fasteners not included, j-box by others)
ingress protection	IP65: dry, damp, or wet locations with PVC closed cell foam gasket to seal out contaminants
finish	Six stage chemical iron phosphate conversion pre-treatment. Polyester powder coat finish, 18 µm Min., 5000hr salt spray test (ASTM B117) compliant with Florida / AAMA 2604 specification.

PERFORMANCE	
color temperature	2700K | 3000K | 3500K | 4000K
lumen output	1200 lm | 1800 lm | 2500 lm | 3800 lm | 5100 lm | 9555 lm
lifetime	> 70,000 hours / L70 or better
color consistency	3 SDCM / standard: 85 CRI | optional: 90 CRI
operating temperature	-13°F to 104°F (-25°C to 40°C)
junction temperature	73°C @ Tᴬ 25°C
warranty	5-Year limited warranty (refer to website for details)

ELECTRICAL	
input voltage	Universal 120-277VAC I optional: 347VAC (Integral)
power supply	Integral Class II, electronic, high power factor > 94% @120V
certifications	ETL/cETL Listed, CEC Title 24 JA8 compliant (only 90CRI complies), ADA Compliant
standards	UL 1598 / CSA C22.2 No. 250.0 - Class II / IES LM-79 / LM-80
power consumption	79W @ 120V - 277V (maximum)
dimming	Standard: 0-10V (1%) I Optional: ELV (120V Only) / DMX (Remote Only) / DALI (Integral)

Due to continuous development and improvements, specifications are subject to change without notice. FC Lighting reserves the right to change lab test details or specifications without notice. Product use certifies agreement to FC Lighting terms and conditions. FCC Series Cylinder Lights are engineered and produced in our Illinois manufacturing facility.

US Commercial Lighting Manufacturer Since 1982 — Specification Sheet

© FC Lighting 3609 Swenson Ave. • St. Charles, IL • 60174 | fclighting.com | 800.900.1730 AG-JF-111521

1

FCWS7170 Ordering Information

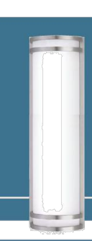

ORDERING INFORMATION

FCWS7170

SERIES	VOLTAGE	CCT	CRI	LUMENS	FINISH	OPTIONS
FCWS7170	UNV UNV 120V-277V	27K 2700K	CRI85 85 CRI (Standard)	12L 1200 lm (10W)	BA Brushed Aluminum	LD 0-10V Dimming, 1%
	120V 120 Volts	3K 3000K	CRI90 90 CRI	18L 1800 lm (15W)	BKE Black	ELV* ELV Dimming *(120V Only)
	347V 347V (Integral)	35K 3500K		25L 2500 lm (21W)	BZE Bronze	DMX DMX Dimming (Integral)
		4K 4000K		38L 3800 lm (31W)	GRE Graphite Grey	DALI DALI Dimming (Integral)
				51L 5100 lm (40W)	SLE Silver	
				96L 9555 lm (79W)	WHE White	
					CCE Custom Color	

REMOTE DRIVER & BATTERY BACKUP

FCWS7170R

SERIES	VOLTAGE	CCT	CRI	LUMENS	FINISH	OPTIONS
FCWS7170R†	UNV UNV 120V-277V	27K 2700K	CRI85 85 CRI (Standard)	12L 1200 lm (10W)	BA Brushed Aluminum	LD 0-10V Dimming, 1%
		3K 3000K	CRI90 90 CRI	18L 1800 lm (15W)	BKE Black	DMX DMX Dimming (Remote)
		35K 3500K		25L 2500 lm (21W)	BZE Bronze	DALI DALI Dimming (Remote)
		4K 4000K		38L 3800 lm (31W)	GRE Graphite Grey	BBUR[1] Battery Backup Remote (Indoor)
				51L 5100 lm (40W)	SLE Silver	BBUX[2] Battery Backup Remote (Outdoor)
				96L 9555 lm (79W)	WHE White	N/A Leave Blank for Remote Driver Only (without Battery Backup)
					CCE Custom Color	

† LED DRIVER REMOTE (INDOOR) IP20, IK08, NEMA 1, -20°C to +50°C, 30' MAX Distance with 12AWG.
*Consult factory for outdoor remote driver only.

[1] Battery Back-up & LED Driver Remote (INDOOR), IP20, IK08, NEMA 1, 0°C to +48°C, 30' MAX Distance with 12AWG (w/UNV Option Only)
[2] Battery Back-up & LED Driver Remote (OUTDOOR), IP67, IK10, NEMA 4X, -20°C to +55°C, 30' MAX Distance with 12AWG (w/UNV Option Only)

FACE OPTIONS

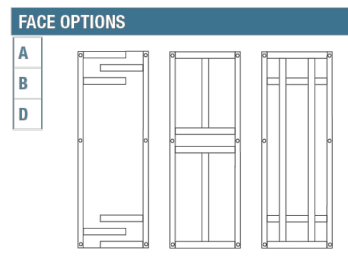

Face Options *(standard face is included - see face options on dimensions page for reference)*

- A Face A *(see face on dimensions page)*
- B Face B *(see face on dimensions page)*
- D Face D *(see face on dimensions page)*

Due to continuous development and improvements, specifications are subject to change without notice. FC Lighting reserves the right to change lab test details or specifications without notice. Product use certifies agreement to FC Lighting terms and conditions. FCC Series Cylinder Lights are engineered and produced in our Illinois manufacturing facility.

US Commercial Lighting Manufacturer Since 1982 — Specification Sheet

© FC Lighting 3609 Swenson Ave. • St. Charles, IL • 60174 | fclighting.com | 800.900.1730 AG-JF-111521

2

	QTY	LABEL	DESCRIPTION
WALL MOUNTED	2	S2	FCWS7168-UNV-35K-2500-CRI85-XX-D

FC OUTDOOR LIGHTING

FCWS7168

Date:	Approved:
Type:	
Fixture:	
Project:	

FCWS7168 Exterior Decor fixture is an IP65 rated, ADA compliant, easy to maintain fixture that has an impact resistant lens and face options to meet the design requirements of your building.

ETL · Title 24 · ADA

SPECIFICATIONS

PHYSICAL	
dimensions	18.5" H x 7.25" W x 4" Deep
weight	7.5 lbs
housing	Marine grade, corrosion resistant, heavy gauge high pressure die cast aluminum
lens	Impact resistant, UV stabilized, opal, polycarbonate diffuser
mounting	Mounts directly to standard junction box; masonry applications use four (4) 0.25" x 0.75" screws with lead anchors (fasteners not included, j-box by others)
ingress protection	IP65: dry, damp, or wet locations with PVC closed cell foam gasket to seal out contaminants
finish	Six stage chemical iron phosphate conversion pre-treatment. Polyester powder coat finish, 18 µm Min., 5000hr salt spray test (ASTM B117) compliant with Florida / AAMA 2604 specification.

PERFORMANCE	
color temperature	2700K | 3000K | 3500K | 4000K
lumen output	1200 lm | 1800 lm | 2500 lm | 4000 lm | 6200 lm
lifetime	> 70,000 hours / L70 or better
color consistency	3 SDCM / standard: 85 CRI | optional: 90 CRI
operatoing temperature	-13°F to 104°F (-25°C to 40°C)
junction temperature	73°C @ Tᴬ 25°C
warranty	5-Year limited warranty (refer to website for details)

ELECTRICAL	
input voltage	Universal 120-277VAC I optional: 347VAC (Integral)
power supply	Integral Class II, electronic, high power factor > 94% @120V
certifications	ETL/cETL Listed, CEC Title 24 JA8 compliant (only 90CRI complies), ADA Compliant
standards	UL 1598 / CSA C22.2 No. 250.0 - Class II / IES LM-79 / LM-80
power consumption	70W @ 120V - 277V (maximum)
dimming	Standard: 0-10V (1%) I Optional: ELV (120V only) / DMX (Remote Only) / DALI (Remote Only)

Due to continuous development and improvements, specifications are subject to change without notice. FC Lighting reserves the right to change lab test details or specifications without notice. Product use certifies agreement to FC Lighting terms and conditions. FCC Series Cylinder Lights are engineered and produced in our Illinois manufacturing facility.

US Commercial Lighting Manufacturer Since 1982 — Specification Sheet

© FC Lighting 3609 Swenson Ave. • St. Charles, IL • 60174 | fclighting.com | 800.900.1730 AG-DM-062123

1

FCWS7168 Ordering Information

ORDERING INFORMATION

FCWS7168

SERIES	VOLTAGE	CCT	CRI	LUMENS	FINISH	OPTIONS
FCWS7168	UNV UNV 120V-277V	27K 2700K	CRI85 85 CRI	12L 1200 lm (14W)	BA Brushed Aluminum	LD 0-10V Dimming, 1%
	120V 120 Volts	3K 3000K	CRI90 90 CRI	18L 1800 lm (20W)	BKE Black	ELV ELV Dimming (120V Only)
	347V 347V (Integral)	35K 2700K		25L 2500 lm (28W)	BZE Bronze	
		4K 4000K		40L 4000 lm (45W)	GRE Graphite Grey	
				62L 6200 lm (70W)	SLE Silver	
					WHE White	
					CCE Custom Color	

REMOTE DRIVER & BATTERY BACKUP

FCWS7168R

SERIES	VOLTAGE	CCT	CRI	LUMENS	FINISH	OPTIONS
FCWS7168R†	UNV UNV 120V-277V	27K 2700K	CRI85 85 CRI	12L 1200 lm (14W)	BA Brushed Aluminum	LD 0-10V Dimming, 1%
		3K 3000K	CRI90 90 CRI	18L 1800 lm (20W)	BKE Black	DMX DMX Dimming (Remote Only)
		35K 2700K		25L 2500 lm (28W)	BZE Bronze	DALI DALI Dimming (Remote Only)
		4K 4000K		40L 4000 lm (45W)	GRE Graphite Grey	BBUR[1] Battery Backup Remote (Indoor)
				62L 6200 lm (70W)	SLE Silver	BBUX[2] Battery Backup Remote (Outdoor)
					WHE White	N/A Leave Blank for Remote Driver Only (without Battery Backup)
					CCE Custom Color	

† LED DRIVER REMOTE (INDOOR) IP20, IK08, NEMA 1, -20°C to +50°C, 30' MAX Distance with 12AWG.
*Consult factory for outdoor remote driver only.

[1] Battery Back-up & LED Driver Remote (INDOOR), IP20, IK08, NEMA 1, 0°C to +48°C, 30' MAX Distance with 12AWG (w/UNV Option Only)
[2] Battery Back-up & LED Driver Remote (OUTDOOR), IP67, IK10, NEMA 4X, -20°C to +55°C, 30' MAX Distance with 12AWG (w/UNV Option Only)

STANDARD FACE INCLUDED

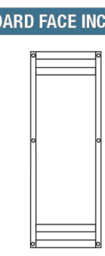

- A Face A *(see dimensions next page)*
- B Face B *(see dimensions next page)*
- D Face D *(see dimensions next page)*

OPTIONAL FACES

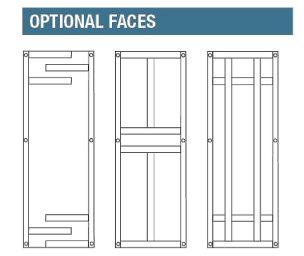

Consult Factory for other options and configurations.

To ensure you receive proper configurations for your lighting specifications, contact us directly about any unique application requirements. This may include but not be limited to lumen output, mounting needs, or electrical components.

Due to continuous development and improvements, specifications are subject to change without notice. FC Lighting reserves the right to change lab test details or specifications without notice. Product use certifies agreement to FC Lighting terms and conditions. FCC Series Cylinder Lights are engineered and produced in our Illinois manufacturing facility.

US Commercial Lighting Manufacturer Since 1982 — Specification Sheet

© FC Lighting 3609 Swenson Ave. • St. Charles, IL • 60174 | fclighting.com | 800.900.1730 AG-DM-062123

2

	QTY	LABEL	DESCRIPTION
WALL MOUNTED	9	W1	SEC-EDG-4MB-WM-02-E-UL-XX-700-57K

ADDITIONAL FIXTURE INFO

THE EDGE® Series

LED Security Wall Pack Luminaire

Rev. Date: V8 09/03/2021

Product Description

THE EDGE® wall mount luminaire has a slim, low profile design. The luminaire end caps are made from rugged die cast aluminum with integral, weathertight LED driver compartments and high performance aluminum heat sinks specifically designed for LED applications. Housing is rugged aluminum. Includes a lightweight mounting box for installation over standard and mud ring single gang J-Boxes. Secures to wall with four 3/16" (5mm) screws (by others). Conduit entry from top, bottom, sides and rear. Allows mounting for uplight or downlight. Designed and approved for easy through-wiring. Includes leaf/debris guard.
Applications: General area and security lighting

Performance Summary

- Patented NanoOptic® Product Technology
- Assembled in the U.S.A. of U.S. and imported parts
- **CRI:** Minimum 70 CRI (4000K & 5700K); 80 CRI (3000K); 90 CRI (5000K)
- **CCT:** Turtle Friendly Amber, 3000K (+/- 300K), 4000K (+/- 300K), 5000K (+/- 500K), 5700K (+/- 500K) standard
- **Limited Warranty†:** 10 years on luminaire/10 years on Colorfast DeltaGuard® finish/1 year on accessories

† See http://creelighting.com/warranty for warranty terms

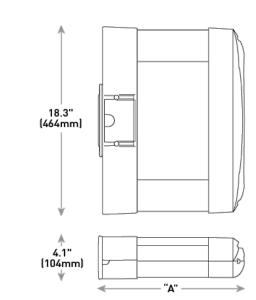

LED Count (x10)	Dim. "A"	Weight
02	9.9" (251mm)	20 lbs. (9.1kg)
04	11.9" (303mm)	22 lbs. (10.0kg)
06	13.9" (353mm)	25 lbs. (11.3kg)
08	15.9" (404mm)	27 lbs. (12.2kg)
10	17.9" (455mm)	31 lbs. (14.1kg)
12	19.9" (505mm)	32 lbs. (14.5kg)

Accessories

Field-Installed		
Bird Spikes XA-BRDSPK	**Beauty Plate** WM-PLT12** - 12" (305mm) Square; WM-PLT14** - 14" (356mm) Square; - Covers holes left by incumbent wall packs	**Hand-Held Remote** XA-SENSREM - For successful implementation of the programmable multi-level option, a minimum of one hand-held remote is required

** Must specify color

Ordering Information

Example: SEC-EDG-2M-WM-06-E-UL-SV-700

Product	Optic	Mounting	LED Count (x10)	Series	Voltage	Color Options	Drive Current	Options
SEC-EDG		WM		E				
SEC-EDG	2M Type II Medium 2MB Type II Medium w/BLS 2S Type II Short 2SB Type II Short w/BLS 3M Type III Medium 3MB Type III Medium w/BLS 4M Type IV Medium 4MB Type IV Medium w/BLS	WM Wall Mount	02 04 06 08 10 12	E	UL Universal 120-277V UH Universal 347-480V 34 347V	BK Black BZ Bronze SV Silver WH White	350 350mA 525 525mA -Available with 20-80 LEDs 700 700mA -Available with 20-60 LEDs	DIM 0-10V Dimming - Control by others - Refer to Dimming spec sheet for details - Can't exceed specified drive current - Not available with PML option F Fuse - Compatible only with 120V, 277V or 347V (phase to neutral) - Consult factory if fusing is required for 208V, 240V or 480V (phase to phase) - Refer to PML spec sheet for availability with PML options - When code dictates fusing, use time delay fuse P Photocell - Must specify UL or 34 voltage PML Programmable Multi-Level - Refer to PML spec sheet for details - Intended for downlight applications with 0° tilt 30K 3000K Color Temperature - Minimum 80 CRI - Color temperature per luminaire 40K 4000K Color Temperature - Minimum 70 CRI - Color temperature per luminaire 50K 5000K Color Temperature - Minimum 90 CRI - Color temperature per luminaire TRL Amber Turtle Friendly LEDs - Available only with 350mA - 600nm dominant wavelength - Additional shielding (by others) may be required for Florida Fish and Wildlife Conservation Commission compliance

cULus · DLC

CREE LIGHTING

US: creelighting.com (800) 236-6800
Canada: creelighting-canada.com (800) 473-1234

THE EDGE® LED Security Wall Pack Luminaire

Product Specifications

CONSTRUCTION & MATERIALS

- Slim, low profile design
- Luminaire sides are rugged die cast aluminum with integral, weathertight LED driver compartment and high performance aluminum heat sinks specifically designed for LED applications
- Housing is rugged aluminum
- Furnished with low copper, light weight mounting box designed for installation over standard and mud ring single gang J-Boxes
- Luminaire can also be direct mounted to a wall and surface wired
- Secures to wall with four 3/16" (5mm) screws (by others)
- Conduit entry from top, bottom, sides, and rear
- Allows mounting for uplight or downlight
- Designed and approved for easy through-wiring
- Includes leaf/debris guard
- Exclusive Colorfast DeltaGuard® finish features an E-Coat epoxy primer with an ultradurable powder topcoat, providing excellent resistance to corrosion, ultraviolet degradation and abrasion. Black, bronze, silver and white are available
- **Weight:** See Dimensions and Weight Chart on page 1

ELECTRICAL SYSTEM

- **Input Voltage:** 120–277V or 347–480V, 50/60Hz, Class 1 drivers
- **Power Factor:** > 0.9 at full load
- **Total Harmonic Distortion:** < 20% at full load
- Integral weathertight J-Box with leads (wire nuts) for easy power hook up
- Integral 10kV surge suppression protection standard
- When code dictates fusing, a slow blow fuse or type C/D breaker should be used to address inrush current
- **Maximum 10V Source Current:** 20 LED (350mA): 10mA; 20LED (525 & 700 mA) and 40-120 LED: 0.15mA

REGULATORY & VOLUNTARY QUALIFICATIONS

- cULus Listed
- Suitable for wet locations
- Meets FCC Part 15, Subpart B, Class A limits for conducted and radiated emissions
- Enclosure rated IP66 per IEC 60529 when ordered without P or PML options
- ANSI C136.2 10kV surge protection, tested in accordance with IEEE/ANSI C62.41.2
- Luminaire and finish endurance tested to withstand 5,000 hours of elevated ambient salt fog conditions as defined in ASTM Standard B 117
- DLC qualified with select SKUs. Refer to https://www.designlights.org/search/ for most current information
- Meets Buy American requirements within ARRA
- ⚠ **CA RESIDENTS WARNING:** Cancer and Reproductive Harm – www.p65warnings.ca.gov

Electrical Data*

LED Count (x10)	CCT	System Watts 120-480V	Total Current (A) 120V	208V	240V	277V	347V	480V
350mA								
02	30K/40K/50K/57K	25	0.21	0.13	0.11	0.10	0.08	0.07
	TRL	19	0.16	0.09	0.08	0.07	0.05	0.04
04	30K/40K/50K/57K	46	0.36	0.23	0.21	0.20	0.15	0.12
	TRL	35	0.29	0.17	0.15	0.13	0.10	0.07
06	30K/40K/50K/57K	66	0.52	0.31	0.28	0.26	0.20	0.15
	TRL	50	0.41	0.24	0.21	0.18	0.14	0.10
08	30K/40K/50K/57K	90	0.75	0.44	0.38	0.34	0.26	0.20
	TRL	68	0.57	0.33	0.28	0.25	0.20	0.14
10	30K/40K/50K/57K	110	0.92	0.53	0.47	0.41	0.32	0.24
	TRL	83	0.69	0.40	0.35	0.30	0.24	0.17
12	30K/40K/50K/57K	130	1.10	0.63	0.55	0.48	0.38	0.28
	TRL	99	0.82	0.48	0.41	0.36	0.28	0.21
525mA								
02	30K/40K/50K/57K	37	0.30	0.19	0.17	0.16	0.12	0.10
04	30K/40K/50K/57K	70	0.58	0.34	0.31	0.28	0.21	0.16
06	30K/40K/50K/57K	101	0.84	0.49	0.43	0.38	0.30	0.22
08	30K/40K/50K/57K	133	1.13	0.66	0.58	0.51	0.39	0.28
700mA								
02	30K/40K/50K/57K	50	0.41	0.25	0.22	0.20	0.15	0.12
04	30K/40K/50K/57K	93	0.78	0.46	0.40	0.36	0.27	0.20
06	30K/40K/50K/57K	134	1.14	0.65	0.57	0.50	0.39	0.29

* Electrical data at 25°C (77°F). Actual wattage may differ by +/- 10% when operating between 120-277V or 347-480V +/- 10%

THE EDGE® Series Ambient Adjusted Lumen Maintenance[1]

Ambient	CCT	Initial LMF	25K hr Reported[2] LMF	50K hr Reported[2] LMF	75K hr Reported[2]/Estimated[3] LMF	100K hr Estimated[3] LMF
5°C (41°F)	30K/40K/50K/57K	1.04	1.03	1.03	1.03[2]	1.03
	TRL	1.06	1.06	1.06	1.06[3]	1.06
10°C (50°F)	30K/40K/50K/57K	1.03	1.02	1.02	1.02[2]	1.02
	TRL	1.04	1.04	1.04	1.04[3]	1.04
15°C (59°F)	30K/40K/50K/57K	1.02	1.01	1.01	1.01[2]	1.01
	TRL	1.03	1.03	1.03	1.03[3]	1.03
20°C (68°F)	30K/40K/50K/57K	1.01	0.99	0.99	0.99[2]	0.99
	TRL	1.01	1.01	1.01	1.01[3]	1.01
25°C (77°F)	30K/40K/50K/57K	1.00	0.98	0.98	0.98[2]	0.98
	TRL	1.00	1.00	1.00	1.00[3]	1.00

[1] Lumen maintenance values at 25°C (77°F) are calculated per IES TM-21 based on IES LM-80 report data for the LED package and in-situ luminaire testing. Luminaire ambient temperature factors (LATF) have been applied to all lumen maintenance factors. Please refer to the Temperature Zone Reference Document for outdoor average nighttime ambient conditions.
[2] In accordance with IES TM-21, Reported values represent interpolated values based on time durations that are up to 6x the tested duration in the IES LM-80 report for the LED.
[3] Estimated values are calculated and represent time durations that exceed the 6x test duration of the LED.

US: creelighting.com (800) 236-6800
Canada: creelighting-canada.com (800) 473-1234

CREE LIGHTING

DYNAMIC • ENGINEERING • EARTH • SURVEY • TRAFFIC

REV.	DATE	COMMENTS	BY

THIS PLAN SET IS FOR PERMITTING PURPOSES ONLY AND MAY NOT BE USED FOR CONSTRUCTION

DRAWN BY: LZ · DESIGNED BY: MS · CHECKED BY: MAW · CHECKED BY: –

PROJECT: **SWATARA PAXTON DEVELOPERS LLC**
PROPOSED WAWA FOOD MARKET & FUELING STATION
PARCEL NO. 63-022-037
US ROUTE 322 & BRIDGE ROAD (SR 2018)
TOWNSHIP OF SWATARA, DAUPHIN COUNTY, PENNSYLVANIA

811 Know what's below. Call before you dig.
PROTECT YOURSELF
ALL STATES REQUIRE NOTIFICATION OF EXCAVATORS, DESIGNERS, OR ANY PERSON PREPARING TO DISTURB THE EARTH'S SURFACE ANYWHERE IN ANY STATE
FOR STATE SPECIFIC DIRECT PHONE NUMBERS VISIT: WWW.CALL811.COM

DYNAMIC ENGINEERING
LAND DEVELOPMENT CONSULTING • PERMITTING
GEOTECHNICAL • ENVIRONMENTAL
TRAFFIC • SURVEY • PLANNING & ZONING
826 Newtown Yardley Road
Suite 201, Newtown, PA 18940
T: 267.685.0276 | F: 267.685.0361
Offices conveniently located at:
Lake Como, New Jersey • T: 732.974.0198
Chester, New Jersey • T: 908.879.9229
Marlton, New Jersey • T: 856.334.2000
Newark, New Jersey • T: 973.755.7200
Toms River, New Jersey • T: 732.974.0198
Newtown, Pennsylvania • T: 267.685.0276
Philadelphia, Pennsylvania • T: 215.253.4888
Bethlehem, Pennsylvania • T: 610.598.4400
Allen, Texas • T: 972.534.2100
Houston, Texas • T: 281.789.6400
Austin, Texas • T: 512.646.2646
Delray Beach, Florida • T: 561.921.8570
Annapolis, Maryland • T: 410.567.5000
www.dynamicec.com

JUSTIN A. GEONNOTTI
PROFESSIONAL ENGINEER
PENNSYLVANIA LICENSE No. 080629

MARK A. WHITAKER
PROFESSIONAL ENGINEER
NEW JERSEY LICENSE No. 41417

TITLE: LIGHTING DETAILS

SCALE: (H) AS (V) SHOWN	DATE: 11/21/2023
PROJECT No: 1478-99-212	

SHEET No: 15 OF 34 · Rev. #: 0

Plotted: 11/22/23 – 12:43 PM, By: ajwright
File: P:\DECPC PROJECTS\1478 Paramount Realty\99-212 Swatara PA\Dwg\Land Dev Plans\D1478992125I0.dwg, ---> 15 LIGHTING DETAILS

COPYRIGHT © 2023 – DYNAMIC ENGINEERING CONSULTANTS, PC – ALL RIGHTS RESERVED

LANDSCAPE LEGEND

- PROPOSED MULCH AREA
- PROPOSED SODDED GRASS AREA
- PROPOSED RIVER ROCK
- PROPOSED ERNMX 183 SEEDING
- PROPOSED R-3 RIP RAP SLOPE REINFORCEMENT

SWATARA TOWNSHIP LANDSCAPING REQUIREMENTS

1. BUFFER REQUIREMENTS (§ 295-123.D)
   A. A MINIMUM THIRTY-FOOT-WIDE BUFFER YARD WITH PLANT SCREENING SHALL BE REQUIRED ALONG THE REAR AND SIDE LOT LINES OF ANY LOT USED PRINCIPALLY FOR PRINCIPAL NONRESIDENTIAL PURPOSES THAT IS CONTIGUOUS TO A LOT OCCUPIED BY AN EXISTING PRINCIPAL DWELLING OR AN UNDEVELOPED RESIDENTIALLY ZONED LOT. **(NOT APPLICABLE – NO SIDE OR REAR YARD ADJACENT TO RESIDENTIAL OR RESIDENTIAL DISTRICTS)**
2. STREET TREES (§ 295-124.C)
   A. A MINIMUM AVERAGE OF ONE SUCH TREE SHALL BE PLANTED FOR EACH 50 FEET OF LENGTH OF STREET RIGHT-OF-WAY AROUND THE LOT
      i.BRIDGE ROAD (SR 2018) – 10 STREET TREES **(COMPLIES)**
3. PARKING LOT LANDSCAPING (§ 295-124.D)
   A. A MINIMUM OF ONE DECIDUOUS TREE SHALL BE REQUIRED FOR EVERY 15 NEW OFF-STREET PARKING SPACES.
      i.PARKING LOT – 4 TREES **(COMPLIES)**
4. STORMWATER BASIN LANDSCAPING (§ 295-124.G)
   A. A MINIMUM AVERAGE OF TWO TREES AND 10 SHRUBS SHALL BE REQUIRED TO BE PLANTED AROUND THE BASIN FOR EVERY 100 LINEAR FEET OF BASIN PERIMETER.
      i.RAIN GARDEN BASIN – 5 TREES & 25 SHRUBS **(COMPLIES)**
   B. NATURAL GROUND COVER PLANT SPECIES SHALL BE PLANTED IN THE FLOORS AND SLOPES OF THE BASIN. THESE GROUND COVERS MAY INCLUDE WILDFLOWERS, MEADOWS OR NONAGRESSIVE GRASSES. SPECIES SHALL BE CHOSEN THAT ARE SUITABLE FOR THE EXPECTED WETNESS OF VARIOUS PORTIONS OF THE BASIN. THE PLANTINGS SHALL PROVIDE A CONTINUOUS COVER OVER ALL EARTH AREAS OF THE BASIN. THE PLANTINGS SHALL NOT INTERFERE WITH THE PROPER FUNCTIONING OF THE BASIN, IN THE DETERMINATION OF THE TOWNSHIP ENGINEER. **(COMPLIES)**

THIS PLAN TO BE UTILIZED FOR LANDSCAPE PURPOSES ONLY

SEE SHEET 17 OF 34 FOR LANDSCAPE PLAN NOTES & DETAILS

LANDSCAPE SCHEDULE

KEY	QTY	BOTANICAL NAME	COMMON NAME	SIZE	REMARKS
SHADE TREE(S)					
AR	14	ACER RUBRUM	RED MAPLE	2 1/2-3" CAL.	B+B
AS	3	ACER SACCHARUM	SUGAR MAPLE	2 1/2-3" CAL.	B+B
	T7				
DECIDUOUS SHRUB(S)					
IXV	84	ILEX X VERTICILLATA 'HARVEST RED'	HARVEST RED WINTERBERRY	30-36"	#5 CAN
VD	76	VIBURNUM DENTATUM	ARROWWOOD VIBURNUM	3-4'	B+B
	T60				

NOTE: IF ANY DISCREPANCIES OCCUR BETWEEN AMOUNTS SHOWN IN THE PLAN AND THE PLANT LIST, THE PLAN SHALL DICTATE.

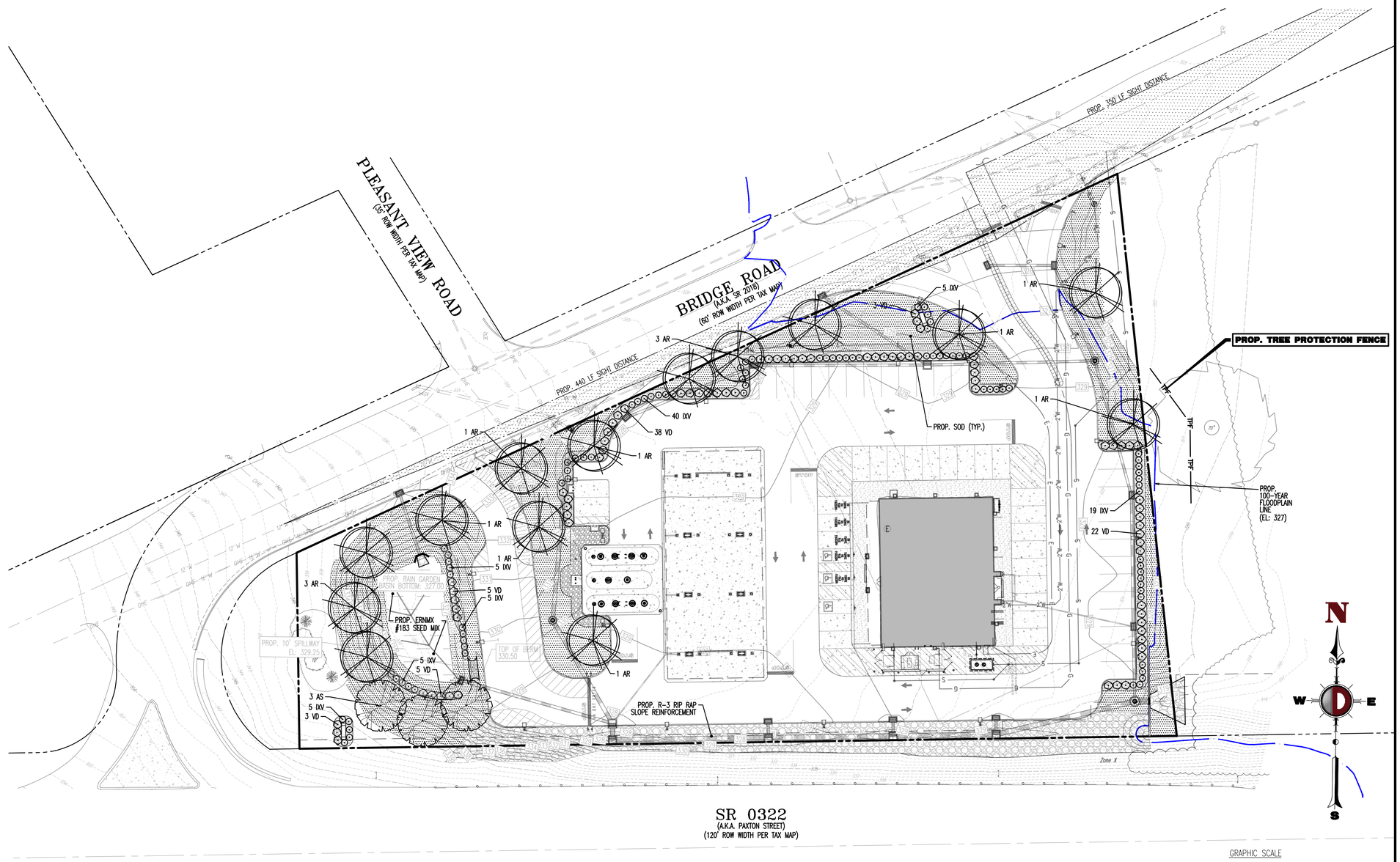

DYNAMIC ENGINEERING CONSULTANTS, PC
SURVEY • TRAFFIC

REV.	DATE	COMMENTS	BY

THIS PLAN SET IS FOR PERMITTING PURPOSES ONLY AND MAY NOT BE USED FOR CONSTRUCTION

DRAWN BY: LZ | DESIGNED BY: MS | CHECKED BY: MAW | CHECKED BY: –

PROJECT: **SWATARA PAXTON DEVELOPERS LLC**
PROPOSED WAWA FOOD MARKET & FUELING STATION
PARCEL NO. 63-022-037
US ROUTE 322 & BRIDGE ROAD (SR 2018)
TOWNSHIP OF SWATARA, DAUPHIN COUNTY, PENNSYLVANIA

811 Know what's below. Call before you dig.
PROTECT YOURSELF
ALL STATES REQUIRE NOTIFICATION OF EXCAVATORS, DESIGNERS, OR ANY PERSON PREPARING TO DISTURB THE EARTH'S SURFACE ANYWHERE IN ANY STATE
FOR STATE SPECIFIC DIRECT PHONE NUMBERS VISIT: WWW.CALL811.COM

DYNAMIC ENGINEERING
LAND DEVELOPMENT CONSULTING • PERMITTING
GEOTECHNICAL • ENVIRONMENTAL
TRAFFIC • SURVEY • PLANNING & ZONING
826 Newtown Yardley Road
Suite 201, Newtown, PA 18940
T: 267.685.0276 | F: 267.685.0361
Offices conveniently located at:
Lake Como, New Jersey • T: 732.974.0198
Chatham, New Jersey • T: 908.879.9229
Wayfinder, New Jersey • T: 856.534.2000
Neptune, New Jersey • T: 973.735.7200
Toms River, New Jersey • T: 732.974.0198
Newtown, Pennsylvania • T: 267.685.0276
Philadelphia, Pennsylvania • T: 215.253.4888
Bethlehem, Pennsylvania • T: 610.398.4400
Allentown, Texas • T: 972.334.2100
Houston, Texas • T: 281.759.4400
Austin, Texas • T: 512.244.7642
Delray Beach, Florida • T: 561.972.8370
Annapolis, Maryland • T: 410.562.5000
www.dynamicec.com

JUSTIN A. GEONNOTTI
PROFESSIONAL ENGINEER
PENNSYLVANIA LICENSE No. 080629

MARK A. WHITAKER
PROFESSIONAL ENGINEER
NEW JERSEY LICENSE No. 41417

TITLE: LANDSCAPING PLAN

SCALE: (H) 1"=30' (V) | DATE: 11/21/2023

PROJECT No: 1478-99-212

SHEET No: 16 OF 34 | Rev. #: 0

Plotted: 11/22/23 – 12:44 PM, By: ajwright
File: P:\DEPC PROJECTS\1478 Paramount Realty\99-212 Swatara PA\Dwg\Land Dev Plans\D1478992123L0.dwg, ----> 16 LANDSCAPING PLAN

COPYRIGHT © 2023 – DYNAMIC ENGINEERING CONSULTANTS, PC – ALL RIGHTS RESERVED

GENERAL NOTES

1. THIS PLAN IS TO BE UTILIZED FOR LANDSCAPE PURPOSES ONLY.
2. ALL DISTURBED UNPAVED AREAS, EXCLUDING PLANTING BEDS, ARE TO BE INSTALLED AS SODDED LAWN IN ACCORDANCE WITH LANDSCAPE SPECIFICATION #2.C., UNLESS OTHERWISE STATED ON THIS PLAN.
3. CONTRACTOR TO PROVIDE AN IRRIGATION DESIGN FOR BOTH LAWN AND BED AREAS. DESIGN IS TO BE SUBMITTED TO THE PROJECT LANDSCAPE ARCHITECT FOR REVIEW AND APPROVAL. CONTRACTOR IS ALSO RESPONSIBLE FOR ANY PRESSURE REDUCING DEVICES REQUIRED TO MEET MAXIMUM PRESSURE REQUIREMENT.
4. ALL LANDSCAPE BEDS ARE TO BE INSTALLED WITH WEED BARRIER FABRIC (SEE DETAIL).
5. SHRUBS PLANTED ALONG HEAD-IN PARKING STALLS SHALL BE INSTALLED TO ALLOW A CLEARANCE OF TWO FEET FROM FACE OF CURB TO ALLOW FOR BUMPER OVERHANG.
6. CENTER OF PROPOSED ORNAMENTAL OR EVERGREEN TREE SHALL BE OFFSET 6' FROM THE BACK OF THE WALL (11' FOR SHADE TREES) TO PREVENT WALL FAILURE. FINAL PLANTING LOCATIONS SHALL BE COORDINATED WITH THE WALL DESIGNER.

ERNST SEED CO. NATIVE RAIN GARDEN AREA SEEDING SPECIFICATIONS (ERNMX-183):

- SWITCHGRASS, 'SHAWNEE' (PANICUM VIRGATUM, 'SHAWNEE') REDTOP PANICGRASS,
- COASTAL PLAIN NC ECOTYPE (PANICUM RIGIDULUM (P. STIPITATUM),
- COASTAL PLAIN NC ECOTYPE) VIRGINIA WILDRYE,
- PA ECOTYPE (ELYMUS VIRGINICUS, PA ECOTYPE) GREEN BULRUSH,
- PA ECOTYPE (SCIRPUS ATROVIRENS, PA ECOTYPE) AUTUMN BENTGRASS,
- PA ECOTYPE (AGROSTIS PERENNANS, PA ECOTYPE) SOFT RUSH (JUNCUS EFFUSUS) TICKLEGRASS (ROUGH BENTGRASS),
- PA ECOTYPE (AGROSTIS SCABRA, PA ECOTYPE) PATH RUSH,
- PA ECOTYPE (JUNCUS TENUIS, PA ECOTYPE)

1. **SOW ABOVE MIX AT A RATE OF 20 LBS./ACRE OR 1/2 LB PER 1,000 S.F.**
2. **SUPPLEMENT ABOVE MIX WITH A COVER CROP OF GRAIN RYE AT 30 LBS/ACRE (SEP 1 TO APR 30) OR JAPENESE MILLET AT 10 LBS/ACRE (MAY 1 TO AUG 31).**
3. **MOW SEEDED AREA ONCE PER YEAR IN LATE SPRING.**

- THE ROLE OF PLANTS IN ALL STORM WATER MANAGEMENT FACILITIES IS TO PREVENT EROSION AND SLOW WATER MOVEMENT, HOLD OR CONVERT POLLUTANTS, ENHANCE INFILTRATION AND EVAPOTRANSPIRATION, AND ENCOURAGE WILDLIFE. THE DESIGNER CAN SELECT PLANT SPECIES OR MIXES THAT MEET THE CRITICAL OBJECTIVES AND EXTREME CONDITIONS UNDER WHICH PLANTS MUST SURVIVE. NATIVE GRASSES ESTABLISH RAPIDLY, WITH FIBROUS ROOT SYSTEMS THAT TOLERATE FAST-MOVING WATER. HERBACEOUS SPECIES PLAY THE ROLE OF ADDING AESTHETICS, TEXTURE, AND INVASIVE SPECIES, PARTICULARLY THOSE THAT WILL ADAPT TO WET CONDITIONS, SHOULD BE REMOVED OR SPRAYED BEFORE THEY BECOME INCORPORATED INTO THE SITE.
- NORMAL VEGETATION CAN BE WORKED INTO THE TOPSOIL, WHICH SHOULD BE STOCKPILED UNTIL THE FINAL GRADE HAS BEEN ESTABLISHED. WITH THE ENGINEER'S SPECIFICATIONS AND DIMENSIONS IN HAND, ON-SITE CONSTRUCTION OF THE BERM AND OUTLETS MUST BE EXECUTED CAREFULLY IN ORDER TO MAINTAIN STRUCTURAL INTEGRITY. THE INFILTRATION AND PLANT GROWTH AREAS SHOULD BE LOOSE AND FRIABLE, HIGH IN ORGANIC MATTER, AND CONSTRUCTED WITHOUT COMPACTIONS FROM METHOD, ONE CAN USE AN EXCAVATOR TO DIG AND DROP EACH AREA OF THE BOTTOM SOIL IN A LOOSE MANNER. AT THIS POINT, ONE CAN INCORPORATE LIME, COMPOSTED LEAVES, AND/OR GRASS CLIPPINGS. THE EXCAVATION MACHINE DOES NOT MOVE OVER THE FINISHED SEEDING AND PLANTING METHODS SEEDING AND PLANTING SHOULD BEGIN IMMEDIATELY UPON COMPLETION OF THE STRUCTURE WHEN THE SOIL IS STILL FRIABLE AND BEFORE INVASIVE WEEDS EMERGE.
- PLAN SEEDING AND PLANTING BEFORE THE BASIN IS FLOODED, OR ALLOW THE BASIN TO DRAIN TO A FEW INCHES BEFORE SEEDING. BROADCAST SEED EVENLY OVER EACH UNIT BY HAND SEEDING OR HYDROSEEDING. SEEDING RATES ARE GENERALLY LOW (1/2 LB PER 1,000 SQ FT). THE USE OF A SEED FILLER; I.E., PAM-12, CAN BE USED TO CREATE A MIX OF 10 LB PER 1,000 SQ FT (I.E., 9-1/2 LB OF PAM-12 MIXED WITH 1/2 LB OF SEED), WHICH CAN BE BROADCAST EVENLY OVER THE AREA. BARLEY, OATS, OR RYE CAN PROVIDE TEMPORARY VEGETATION TO PROTECT THE SOIL IN STORM WATER MANAGEMENT FACILITIES UNTIL PERMANENT VEGETATION CAN BE ESTABLISHED. THE USE OF NATIVE SPECIES; I.E., VIRGINIA WILD RYE, CAN CREATE AN INTERMEDIATE VEGETATIVE COVER THAT SUCCEEDS TO NATIVE LONG-TERM VEGETATION. STRAW MULCH OR STRAW COCONUT MATS ARE FREQUENTLY USED TO CONTROL EROSION AND PROTECT EMERGING SEEDLINGS FROM EXTREME TEMPERATURES AND DRYING OUT. MULCH SHOULD BE SPARSE TO ALLOW SUNLIGHT TO REACH THE GROUND. TRANSPLANTED SEEDLINGS AND SHRUBS NEED TEMPORARY WATER UNTIL THEY BECOME WELL ROOTED. IRRIGATION OF SEEDED AREAS IS OF VALUE UNTIL SEEDLINGS BECOME ESTABLISHED.
- GENERAL MAINTENANCE IN ADDITION TO STRUCTURAL MAINTENANCE, SILTATION NEEDS TO BE REMOVED AS NEEDED. PLANTS NEED TO BE TRIMMED BACK TO MAINTAIN AESTHETIC VALUE AND INVASIVE SPECIES NEED TO BE CONTROLLED. CLOSE MOWING OR EXTENSIVE CHEMICAL

PLANTING NOTES

1. PLANT MATERIAL SHALL BE FURNISHED AND INSTALLED AS INDICATED; INCLUDING ALL LABOR, MATERIALS, PLANTS, EQUIPMENT, INCIDENTALS, AND CLEAN-UP.
2. THE CONTRACTOR SHALL BE RESPONSIBLE FOR PLANTING AT CORRECT GRADES AND ALIGNMENT. LAYOUT TO BE APPROVED BY LANDSCAPE ARCHITECT PRIOR TO INSTALLATION.
3. PLANTS SHALL BE TYPICAL OF THEIR SPECIES AND VARIETY; HAVE NORMAL GROWTH HABITS; WELL DEVELOPED BRANCHES, DENSELY FOLIATED, VIGOROUS ROOT SYSTEMS AND BE FREE FROM DEFECTS AND INJURIES.
4. CONTRACTOR SHALL REPORT ANY SOIL OR DRAINAGE CONDITIONS CONSIDERED DETRIMENTAL TO THE GROWTH OF PLANT MATERIAL.
5. ALL PLANT MATERIAL SHALL BE GUARANTEED BY THE CONTRACTOR TO BE IN VIGOROUS GROWING CONDITION. PROVISION SHALL BE MADE FOR A GROWTH GUARANTEE OF AT LEAST ONE (1) YEAR FROM THE DATE OF ACCEPTANCE FOR TREES AND SHRUBS. REPLACEMENTS SHALL BE MADE AT THE BEGINNING OF THE FIRST SUCCEEDING PLANTING SEASON. ALL REPLACEMENTS SHALL HAVE A GUARANTEE EQUAL TO THAT STATED ABOVE.
6. INSOFAR AS IT IS PRACTICABLE, PLANT MATERIAL SHALL BE PLANTED ON THE DAY OF DELIVERY. IN THE EVENT THIS IS NOT POSSIBLE, THE CONTRACTOR SHALL PROTECT STOCK NOT PLANTED. PLANTS SHALL NOT REMAIN UNPLANTED FOR LONGER THAN A THREE DAY PERIOD AFTER DELIVERY. ANY PLANTS NOT INSTALLED DURING THIS PERIOD WILL BE REJECTED.
7. QUALITY AND SIZE OF PLANTS, SPREAD OF ROOTS, AND SIZE OF BALLS SHALL BE IN ACCORDANCE WITH ANSI Z60.1 (REV. 2001) "AMERICAN STANDARD FOR NURSERY STOCK" AS PUBLISHED BY THE AMERICAN NURSERY & LANDSCAPE ASSOCIATION.
8. ALL PLANTS SHALL BE PLANTED IN AMENDED TOPSOIL THAT IS THOROUGHLY WATERED AND TAMPED AS BACK FILLING PROGRESSES. PLANTING MIX TO BE AS SHOWN ON PLANTING DETAILS. LARGE PLANTING AREAS TO INCORPORATE FERTILIZER AND SOIL CONDITIONERS AS STATED IN PLANTING SPECIFICATIONS.
9. PLANTS SHALL NOT BE BOUND WITH WIRE OR ROPE AT ANY TIME SO AS TO DAMAGE THE BARK OR BREAK BRANCHES. PLANTS SHALL BE HANDLED FROM THE BOTTOM OF THE BALL ONLY.
10. PLANTING OPERATIONS SHALL BE PERFORMED DURING PERIODS WITHIN THE PLANTING SEASON WHEN WEATHER AND SOIL CONDITIONS ARE SUITABLE AND IN ACCORDANCE WITH ACCEPTED LOCAL PRACTICE. PLANTS SHALL NOT BE INSTALLED IN TOPSOIL THAT IS IN A MUDDY OR FROZEN CONDITION. ALL PLANT MATERIAL SHALL BE SPRAYED WITH 'WILT-PRUF' OR EQUAL AS PER MANUFACTURER'S INSTRUCTIONS.
11. NO PLANT, EXCEPT GROUND COVERS, SHALL BE PLANTED LESS THAN TWO FEET FROM EXISTING STRUCTURES AND SIDEWALKS.
12. SET ALL PLANTS PLUMB AND STRAIGHT. SET AT SUCH LEVEL THAT, A NORMAL OR NATURAL RELATIONSHIP TO THE CROWN OF THE PLANT WITH THE GROUND SURFACE WILL BE ESTABLISHED. LOCATE PLANT IN THE CENTER OF THE PIT.
13. ALL INJURED ROOTS SHALL BE PRUNED TO MAKE CLEAN ENDS BEFORE PLANTING UTILIZING CLEAN, SHARP TOOLS. IT IS ADVISABLE TO PRUNE APPROXIMATELY 1/3 OF THE GROWTH OF LARGE TREES (2" CALIPER AND OVER) BY THE REMOVAL OF SUPERFLUOUS BRANCHES, THOSE WHICH CROSS, THOSE WHICH RUN PARALLEL, ETC. MAIN LEADER OF TREES WILL NOT BE CUT BACK. LONG SIDE BRANCHES, HOWEVER, MUST BE SHORTENED.
14. EACH TREE AND SHRUB SHALL BE PRUNED IN ACCORDANCE WITH STANDARD HORTICULTURAL PRACTICE TO PRESERVE NATURAL CHARACTER OF PLANT. PRUNING SHALL BE DONE WITH CLEAN, SHARP TOOLS.
15. ALL EXISTING TREES TO REMAIN SHALL BE PRUNED TO REMOVE ANY DAMAGED BRANCHES AS A RESULT OF CONSTRUCTION OPERATIONS. ALL EXISTING TREES SHALL BE FERTILIZED WITH A REGULAR GARDEN FERTILIZER (5-10-5) UPON COMPLETION OF WORK. THE ENTIRE LIMB OF ANY DAMAGED BRANCH SHALL BE CUT OFF AT THE TRUNK. CONTRACTOR TO ENSURE THAT CUTS ARE SMOOTH AND STRAIGHT. ANY EXPOSED ROOTS SHALL BE CUT BACK WITH SHARP TOOLS AND FILLED AROUND WITH TOPSOIL. COMPLETELY SATURATE THESE AREAS WITH WATER. ROOTS SHALL NOT BE LEFT EXPOSED FOR MORE THAN ONE (1) DAY. CONTRACTOR IS TO PROTECT ALL EXISTING TREES TO REMAIN BY ERECTING TREE PROTECTION FENCE AT THE DRIP LINE. THIS WILL ENSURE NO COMPACTION OF THE ROOT MASS.
16. ALL PLANTING BEDS SHALL BE MULCHED WITH 4" LAYER OF DOUBLE SHREDDED HARDWOOD BARK MULCH.
17. NEW PLANTING AREAS AND SOD SHALL BE ADEQUATELY IRRIGATED OR WATERED TO ESTABLISH THE PROPOSED PLANTS AND LAWN.
18. PRIOR TO THE ISSUANCE OF ANY CERTIFICATE OF OCCUPANCY, THE PROPOSED LANDSCAPE AS SHOWN ON THE APPROVED LANDSCAPE PLAN MUST BE INSTALLED, INSPECTED AND APPROVED BY THE MUNICIPAL LANDSCAPE ARCHITECT. THE MUNICIPAL ENGINEER AND LANDSCAPE ARCHITECT SHALL TAKE INTO ACCOUNT SEASONAL CONSIDERATIONS IN THIS REGARD AS FOLLOWS. THE PLANTING OF TREES, SHRUBS, VINES OR GROUND COVER AS REQUIRED BY OR ASSOCIATED WITH A SUBDIVISION OR SITE PLAN APPROVAL BY THE PLANNING BOARD OR ZONING BOARD OF ADJUSTMENT SHALL BE INSTALLED DURING THE FOLLOWING PLANTING SEASONS:

TYPE	DATES
PLANTS	3/15 TO 12/15
LAWN	3/15 TO 6/15
	9/15 TO 12/1

FURTHERMORE, THE FOLLOWING TREE VARIETIES SHALL NOT BE PLANTED DURING THE FALL PLANTING SEASON DUE TO THE HAZARDS ASSOCIATED WITH DIGGING THESE TREES IN THIS SEASON.

ACER RUBRUM	POPULUS VARIETIES
BETULA VARIETIES	PRUNUS VARIETIES
CARPINUS VARIETIES	PYRUS VARIETIES
CRATAEGUS VARIETIES	QUERCUS VARIETIES
KOELREUTERIA	SALIX WEEPING VARIETIES
LIQUIDAMBAR STYRACIFLUA	TILIA TOMENTOSA
LIRIODENDRON TULIPIFERA	ZELKOVA VARIETIES
PLATANUS ACERFOLIA	

ANY PLANTINGS INSTALLED IN CONFLICT WITH THIS REQUIREMENT MUST RECEIVE THE WRITTEN APPROVAL BY THE MUNICIPAL ENGINEER OR LANDSCAPE ARCHITECT, PRIOR TO PLANTING. FAILURE TO COMPLY WITH THESE REQUIREMENTS WILL REQUIRE THE REMOVAL OF THE PLANTING IN QUESTION. THIS REQUIREMENT DOES NOT APPLY TO SEEDING OR SODDING OR PLANTINGS SPECIFICALLY FOR SOIL STABILIZATION PURPOSES. THE PLANTING ASSOCIATED WITH ANY LOT GIVEN A CERTIFICATE OF OCCUPANCY OUTSIDE THESE PERIODS SHALL BE PROVIDED DURING THE PREVIOUS OR NEXT APPROPRIATE SEASON.

19. ALL DISTURBED AREAS TO BE TREATED WITH TOPSOIL SEED SOD STABILIZATION METHOD.

PLANTING SPECIFICATIONS

1. SCOPE OF WORK
   A. THIS WORK SHALL CONSIST OF PERFORMING, CLEARING AND SOIL PREPARATION, FINISH GRADING, PLANTING AND DRAINAGE, INCLUDING ALL LABOR, MATERIALS, TOOLS, EQUIPMENT, AND ANY OTHER APPURTENANCES NECESSARY FOR THE COMPLETION OF THIS PROJECT.
2. MATERIALS
   A. GENERAL - ALL MATERIALS SHALL MEET OR EXCEED SPECIFICATIONS AS OUTLINED IN THE STATE DEPARTMENT OF TRANSPORTATION (D.O.T.) MANUAL OF ROADWAY AND BRIDGE CONSTRUCTION (LATEST EDITION) OR APPROVED EQUAL.
   B. PLANTS - ALL PLANTS SHALL BE HEALTHY OR NORMAL GROWTH, WELL ROOTED, FREE FROM DISEASE AND INSECTS.
   C. TOPSOIL - LOAMY SILT, HAVING AN ORGANIC CONTENT NOT LESS THAN 5%, pH RANGE BETWEEN 4.5 - 7, BE FREE OF DEBRIS, ROCKS LARGER THAN TWO INCHES (2"), WOOD, ROOTS, VEGETABLE MATTER AND CLAY CLODS.
   D. MULCH - FOUR (4") INCHES DOUBLE SHREDDED HARDWOOD BARK MULCH.
3. FERTILIZER AND SOIL CONDITIONER - PLANTED AREAS
   A. ORGANIC FERTILIZER - SHALL BE PROCESSED SEWER SLUDGE WITH MINIMAL CONTENT OF 1% NITROGEN AND 2% PHOSPHORIC ACID, EQUAL TO 'NITROHUMIS'.
   B. ORGANIC FERTILIZER AND SOIL CONDITIONER - SHALL BE 'GRO- POWER' AND ORGANIC BASE MATERIALS COMPRISED OF DECOMPOSED ANIMAL AND VEGETABLE MATTER AND COMPOSTED TO SUPPORT BACTERIAL CULTURES, CONTAINING NO POULTRY OR HUMAN WASTE. GUARANTEED ANALYSIS (5-3-1): NITROGEN 5%. PHOSPHATE 3%, POTASH 1%. 50% HUMUS AND 15% HUMIC ACIDS.
4. GENERAL WORK PROCEDURES
   A. LANDSCAPE WORK SHALL COMMENCE AS SOON AS THOSE PORTIONS OF THE SITE ARE AVAILABLE. CONTRACTOR TO UTILIZE WORKMANLIKE STANDARDS IN PERFORMING ALL LANDSCAPE CONSTRUCTION. THE SITE IS TO BE LEFT IN A CLEAN STATE AT THE END OF EACH DAY'S WORK. ALL DEBRIS, MATERIALS, AND TOOLS SHALL BE PROPERLY STOCKPILED OR DISPOSED OF. ALL PAVED SURFACES SHALL BE SWEPT CLEAN AT THE END OF EACH DAYS WORK.
5. WEEDING
   A. BEFORE AND DURING PRELIMINARY GRADING AND FINISH GRADING, ALL WEEDS AND GRASSES SHALL BE DUG OUT BY THE ROOTS AND DISPOSED OF AT THE CONTRACTOR'S EXPENSE.
6. TOPSOILING
   A. CONTRACTOR TO PROVIDE A 4" THICK TOPSOIL LAYER IN ALL PLANTING AREAS. TOPSOIL SHOULD BE SPREAD OVER A PREPARED SURFACE IN A UNIFORM LAYER TO PRODUCE A 4" UNSETTLED THICKNESS. TOPSOIL PRESENT AT THE SITE, IF ANY, MAY BE USED TO SUPPLEMENT TOTAL AMOUNT REQUIRED. CONTRACTOR TO FURNISH AN ANALYSIS OF ON-SITE TOPSOIL UTILIZED IN ALL PLANTING AREAS. ADJUST pH AND NUTRIENT LEVELS AS REQUIRED TO ENSURE AN ACCEPTABLE GROWING MEDIUM.
7. SOIL CONDITIONING:
   A. CULTIVATE ALL AREAS TO BE PLANTED TO A DEPTH OF 6". ALL DEBRIS EXPOSED FROM EXCAVATION AND CULTIVATION SHALL BE DISPOSED OF AT THE CONTRACTOR'S EXPENSE. SPREAD EVENLY IN ALL PLANTING AREAS AND TILL (2 DIRECTIONS) INTO TOP 4" WITH THE FOLLOWING PER 1,000 SQ. FT.:
      20 POUNDS 'GRO-POWER'
      100 POUNDS AGRICULTURAL GYPSUM
      20 POUNDS NITROFORM (COURSE) 38-0-0 BLUE CHIP

   SOIL MODIFICATIONS:
   A. THOROUGHLY TILL ORGANIC MATTER INTO THE TOP 6 TO 12 IN. OF MOST PLANTING SOILS TO IMPROVE THE SOIL'S ABILITY TO RETAIN WATER AND NUTRIENTS. USE COMPOSTED BARK, RECYCLED YARD WASTE OR PEAT MOSS. ALL PRODUCTS SHOULD BE COMPOSTED TO A DARK COLOR AND BE FREE OF PIECES WITH IDENTIFIABLE LEAF OR WOOD STRUCTURE. AVOID MATERIAL WITH A pH HIGHER THAN 7.5.
   B. MODIFY HEAVY CLAY OR SILT (MORE THAN 40% CLAY OR SILT) BY ADDING COMPOSTED PINE BARK (UP TO 30% BY VOLUME) AND/OR GYPSUM. COARSE SAND MAY BE USED IF ENOUGH IS ADDED TO BRING THE SAND CONTENT TO MORE THAN 60% OF THE TOTAL MIX. IMPROVE DRAINAGE IN HEAVY SOILS BY PLANTING ON RAISED MOUNDS OR BEDS AND INCLUDING SUBSURFACE DRAINAGE LINES.
   C. MODIFY EXTREMELY SANDY SOILS (MORE THAN 85% SAND) BY ADDING ORGANIC MATTER AND/OR DRY, SHREDDED CLAY LOAM UP TO 30% OF THE TOTAL MIX.
8. PLANTING
   POSITION TREES AND SHRUBS AT THEIR INTENDED LOCATIONS AS PER THE PLANS AND SECURE THE APPROVAL OF THE LANDSCAPE ARCHITECT BEFORE EXCAVATING PITS, MAKING NECESSARY ADJUSTMENTS AS DIRECTED.
   A. PLANTING PITS SHALL BE DUG WITH LEVEL BOTTOMS, WITH THE WIDTH TWICE THE DIAMETER OF ROOT BALL. THE ROOT BALL SHALL REST ON UNDISTURBED GRADE. EACH PLANT PIT SHALL BE BACK FILLED WITH THE FOLLOWING PREPARED SOIL MIXED THOROUGHLY:
      1 PART PEAT MOSS BY VOLUME
      1 PART COW MANURE BY VOLUME
      3 PARTS TOPSOIL BY VOLUME
      21 GRAM 'AGRIFORM' PLANTING TABLETS AS FOLLOWS:
         2 TABLETS PER 1 GAL. PLANT
         3 TABLETS PER 5 GAL. PLANT
         4 TABLETS PER 15 GAL. PLANT
         LARGER PLANTS (2) TWO TABLETS PER 1/2" DIAM. OF TRUNK CALIPER
   B. PREPARED SOIL SHALL BE TAMPED FIRMLY AT BOTTOM OF PIT. FILL PREPARED SOIL AROUND BALL OF PLANT 1/2 WAY, AND INSERT PLANT TABLETS. COMPLETE BACK FILL AND WATER THOROUGHLY.
   C. ALL PLANTS SHALL BE SET SO THAT, THEY BEAR THE SAME RELATION TO THE REQUIRED GRADE AS THEY BORE TO THE NATURAL GRADE BEFORE BEING TRANSPLANTED.
   D. PREPARE RAISED EARTH BASIN AS WIDE AS PLANTING HOLE OF EACH TREE.
   E. WATER IMMEDIATELY AFTER PLANTING. WATER SHALL BE APPLIED TO EACH TREE AND SHRUB IN SUCH MANNER AS NOT TO DISTURB BACK FILL AND TO THE EXTENT THAT ALL MATERIALS IN THE PLANTING HOLE ARE THOROUGHLY SATURATED.
   F. PRUNE ALL PROPOSED TREES DIRECTLY ADJACENT TO WALKWAYS TO A MIN. OF 7' BRANCHING HEIGHT.
9. GROUND COVER
   A. ALL GROUND COVER AREAS SHALL RECEIVE A 1/4" LAYER OF HUMUS RAKED INTO THE TOP 1" OF PREPARED SOIL PRIOR TO PLANTING GROUND COVER.
   B. SPACING AND VARIETY OF GROUND COVER SHALL BE AS SHOWN ON DRAWINGS.
   C. IMMEDIATELY AFTER PLANTING GROUND COVER, CONTRACTOR SHALL THOROUGHLY WATER GROUND COVER.
   D. ALL GROUND COVER AREAS SHALL BE TREATED WITH A PRE-EMERGENT BEFORE FINAL LANDSCAPE INSPECTION. GROUND COVER AREAS SHALL BE WEEDED PRIOR TO APPLYING PRE-EMERGENT. PRE-EMERGENT TO BE APPLIED AS PER MANUFACTURER'S RECOMMENDATION.
10. FINISH GRADING
   A. ALL AREAS WILL BE RECEIVED BY THE CONTRACTOR AT SUBSTANTIALLY PLUS/MINUS .1 FOOT OF FINISH GRADE.
   B. ALL LAWN AND PLANTING AREAS SHALL BE GRADED TO A SMOOTH, EVEN AND UNIFORM PLANE WITH NO ABRUPT CHANGE OF SURFACE, UNLESS OTHERWISE DIRECTED BY LANDSCAPE ARCHITECT. SOIL AREAS ADJACENT TO THE BUILDINGS SHALL SLOPE AWAY.
   C. ALL PLANTING AREAS SHALL BE GRADED AND MAINTAINED TO ALLOW FREE FLOW OF SURFACE WATER.
11. GUARANTEE
   A. CONTRACTOR SHALL GUARANTEE ALL PLANTS FOR A PERIOD OF ONE (1) YEAR FROM ACCEPTANCE OF JOB. OWNER TO SECURE A MAINTENANCE BOND FROM THE CONTRACTOR FOR TEN PERCENT (10%) OF THE VALUE OF THE LANDSCAPE INSTALLATION WHICH WILL BE RELEASED AT THE COMMENCEMENT OF THE GUARANTEE PERIOD AND PASSES A FINAL INSPECTION BY THE OWNER OR OWNERS REPRESENTATIVE.
12. CLEANUP
   A. UPON THE COMPLETION OF ALL PLANTING WORK AND BEFORE FINAL ACCEPTANCE, THE CONTRACTOR SHALL REMOVE ALL MATERIAL, EQUIPMENT, AND DEBRIS RESULTING FROM HIS WORK. ALL PAVED AREAS SHALL BE BROOM CLEANED AND THE SITE LEFT IN A NEAT AND ACCEPTABLE CONDITION AS APPROVED BY THE OWNER'S AUTHORIZED REPRESENTATIVE.
   B. MAINTAIN TREES, SHRUBS AND OTHER PLANTS BY PRUNING, CULTIVATING AND WEEDING AS REQUIRED FOR HEALTHY GROWTH. RESTORE PLANTING SAUCERS. TIGHTEN AND REPAIR STAKE AND GUY SUPPORTS AND RESET TREES AND SHRUBS TO PROPER GRADES OR VERTICAL POSITION AS REQUIRED. RESTORE OR REPLACE DAMAGED WRAPPINGS. SPRAY WITH HERBICIDE AS REQUIRED TO KEEP TREES AND SHRUBS FREE OF INSECTS AND DISEASE.
   C. MAINTAIN LAWNS BY WATERING, FERTILIZING, WEEDING, MOWING, TRIMMING, AND OTHER OPERATIONS SUCH AS ROLLING, REGRADING AND REPLANTING AS REQUIRED TO ESTABLISH A SMOOTH, ACCEPTABLE LAWN, FREE OF ERODED OR BARE AREAS.
13. MAINTENANCE (ALTERNATE BID) COST PER MONTH AFTER INITIAL 90-DAY MAINTENANCE PERIOD.

SEEDING SPECIFICATIONS

1. PRIOR TO SEEDING, AREA IS TO BE TOPSOILED, FINE GRADED, AND RAKED OF ALL DEBRIS LARGER THAN 2" DIAMETER.
2. PRIOR TO SEEDING, CONSULT MANUFACTURER'S RECOMMENDATIONS AND INSTRUCTIONS.
3. SEEDING RATES:

PERENNIAL RYEGRASS	1/2 LB/1,000 SQ FT
KENTUCKY BLUEGRASS	1 LB/1,000 SQ FT
RED FESCUE	1 1/2 LBS/1,000 SQ FT
SPREADING FESCUE	1 1/2 LBS/1,000 SQ FT
FERTILIZER (20:10:10)	14 LBS/1,000 SQ FT
MULCH	90 LBS/1,000 SQ FT

4. GERMINATION RATES WILL VARY AS TO TIME OF YEAR FOR SOWING. CONTRACTOR TO IRRIGATE SEEDED AREA UNTIL AN ACCEPTABLE STAND OF COVER IS ESTABLISHED BY OWNER.

IRRIGATION NOTE:

CONTRACTOR TO PROVIDE AN IRRIGATION DESIGN FOR BOTH LAWN AND BED AREAS. DESIGN IS TO BE SUBMITTED TO THE PROJECT LANDSCAPE ARCHITECT FOR REVIEW AND APPROVAL. CONTRACTOR TO VERIFY STATIC PRESSURE PRIOR TO DESIGN. CONTRACTOR IS ALSO RESPONSIBLE FOR ANY PRESSURE REDUCING DEVICES REQUIRED TO MEET MAXIMUM PRESSURE REQUIREMENT. SYSTEM DESIGN TO SHOW ALL VALVES, PIPING, HEADS BACKFLOW PREVENTION, METERS AND CONTROLLERS. ALL SLEEVES IN PAVEMENT AREAS MUST BE SHOWN. THE CONTRACTOR SHALL BE RESPONSIBLE FOR BACKFLOW PREVENTION DEVICE INSTALLATION AND PERMITTING.

THIS PLAN TO BE UTILIZED FOR LANDSCAPE PURPOSES ONLY

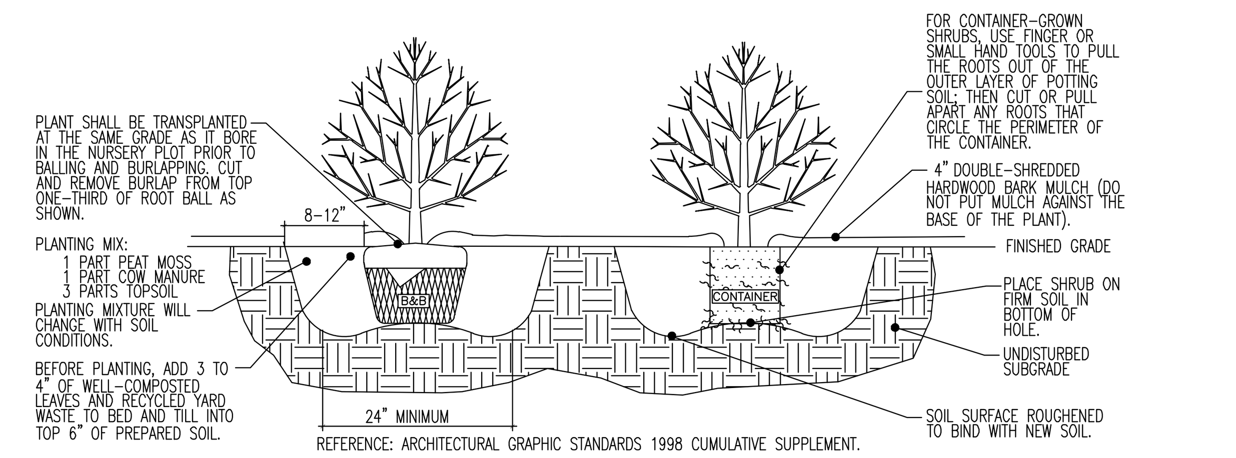

REFERENCE: ARCHITECTURAL GRAPHIC STANDARDS 1998 CUMULATIVE SUPPLEMENT.

DECIDUOUS AND EVERGREEN SHRUB PLANTING DETAIL

NOT TO SCALE

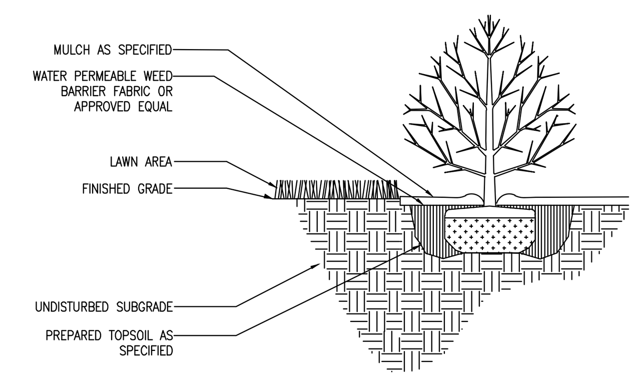

L / S13 WEED BARRIER FABRIC DETAIL

SCALE: N.T.S. REV.: 2015.03.19

NOTES:
1. NO SOIL OR MULCH SHALL BE PLACED AGAINST ROOT COLLAR OF PLANT.
2. REMOVE ALL ROPE FROM TRUNK & TOP OF ROOT BALL FOLD BURLAP BACK ⅓ FROM TOP ROOT BALL
3. PLANTING DEPTH SHALL BE THE SAME AS GROWN IN NURSERY.
4. THOROUGHLY SOAK THE ROOT BALL AND ADJACENT PREPARED SOIL SEVERAL TIMES DURING THE FIRST MONTH AFTER PLANTING AND REGULARLY THROUGHOUT THE FOLLOWING TWO SUMMERS.
5. THE BOTTOM OF PLANTING PIT EXCAVATIONS SHOULD BE ROUGH TO AVOID MATTING OF SOIL LAYERS AS NEW SOIL IS ADDED. IT IS PREFERABLE TO TILL THE FIRST LIFT (2 TO 3 IN.) OF PLANTING SOIL INTO THE SUBSOIL.

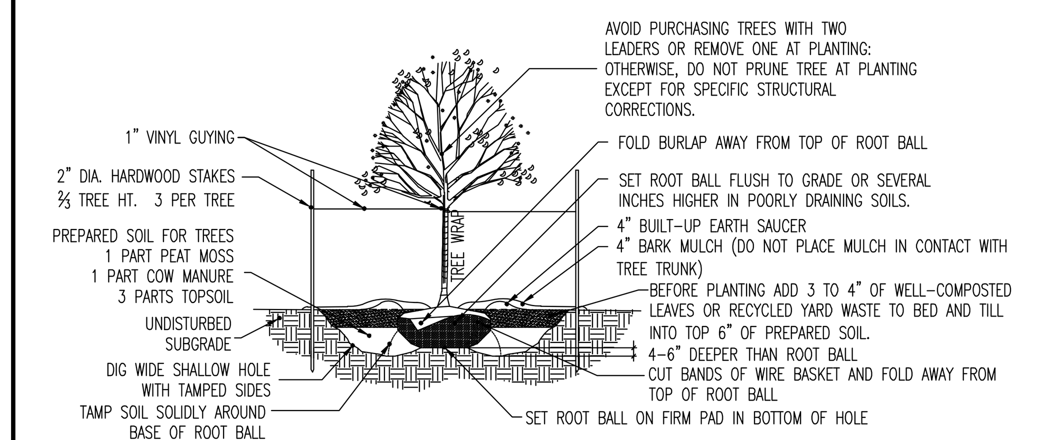

REFERENCE: ARCHITECTURAL GRAPHIC STANDARDS 1998 CUMULATIVE SUPPLEMENT.

DECIDUOUS TREE PLANTING DETAIL

NOT TO SCALE

SUPPLEMENTAL LANDSCAPE NOTES

1. ALL TOPSOIL SHALL BE A MINIMUM 4" IN ALL SOD AREAS AND 8" IN TREE, SHRUB AND GROUND COVER BEDS, INCLUDING PARKING LOT ISLAND BEDS. IT SHALL BE APPROVED BY A WAWA CONSTRUCTION REPRESENTATIVE, PRIOR TO INSTALLATION.
2. PLANTING BEHIND PERPENDICULAR PARKING IS TO BE LOCATED A MINIMUM OF 5' BEHIND THE CURB LINE.
3. ALL LANDSCAPE AND GRASS AREAS ARE TO BE HAND RAKED AND LEFT CLEAR OF ALL STONES, ROCK, CONSTRUCTION DEBRIS AND ANY UNSUITABLE MATERIALS.
4. ALL LANDSCAPE AND GRASS AREAS ARE TO BE IRRIGATED BY AUTOMATIC SPRINKLER SYSTEM. (SEE IRRIGATION SPECIFICATION.)
5. LANDSCAPE CONTRACTOR WILL LOCATE ALL UNDERGROUND UTILITIES PRIOR TO ANY EXCAVATION AND PLANTING INSTALLATION.
6. ALL AREAS TO BE LANDSCAPED OR COVERED WITH STONE MUST BE TREATED WITH A PRE-EMERGENCE HERBICIDE (SURFLAN, DACTAL OR APPROVED EQUAL) IN ACCORDANCE WITH APPLICABLE FEDERAL, STATE REGULATIONS AND THE MANUFACTURER'S INSTRUCTIONS.
7. LANDSCAPE CONTRACTOR TO SUPPLY AND INSTALL A PERVIOUS WEED BARRIER (DEWITT, DUPONT OR APPROVED EQUAL) IN ACCORDANCE WITH MANUFACTURER'S INSTRUCTIONS WITHIN ALL LANDSCAPES, INCLUDING STONE AND MULCH BEDS. ALL WEED BARRIER WILL BE OVERLAPPED A MINIMUM OF 6" AT ALL SEAMS. AT PLANT LOCATIONS, BARRIER SHOULD BE CUT IN AN "X" PATTERN SO TO ACCOMMODATE ROOT BALL AND REPLACED AFTER PLANT HAS BEEN INSTALLED.
8. WEED BARRIER SHALL NOT BE VISIBLE IN AREAS DESIGNATED FOR STONE MULCH. WHEN STONE IS CALLED FOR ADJACENT TO CURB OR SIDEWALKS, IT SHALL BE FEATHERED DOWN TO CURB LEVEL FROM A DISTANCE 24" FROM THE CURB.
9. ALL PROPOSED LANDSCAPING TO BE NURSERY GROWN, TYPICAL OF THEIR SPECIES OR VARIETY. THEY ARE TO HAVE NORMAL VIGOROUS ROOT SYSTEMS, FREE FROM DEFECTS AND INFECTIONS AND IN ACCORDANCE WITH ANSI Z60.1
10. ALL PROPOSED PLANTINGS SHOULD BE INSTALLED PER STANDARDS OF THE "AMERICAN NURSERY & LANDSCAPE ASSOCIATION" AND STATE NURSERY/ LANDSCAPE ASSOCIATIONS WITH REGARD TO PLANTING, PIT SIZE, BACKFILL MIXTURE, STAKING AND GUYING.
11. ALL PLANTING CONTAINERS AND BASKETS SHALL BE REMOVED DURING PLANTING. ALL PLANTS SHALL BE SET PLUMB AND POSITIONED SO THAT THE TOP OF THE ROOT COLLAR MATCHES, OR IS NO MORE THAN TWO (2") INCHES ABOVE, FINISHED GRADE. REPLACE AMENDED BACKFILL IN 6-INCH LAYERS AND COMPACT BACKFILL TO ELIMINATE VOIDS. CONTRACTOR SHALL PROVIDE A FOUR-INCH HIGH EARTHEN WATERING SAUCER ALONG THE PERIMETER OF EACH PLANTING PIT. CONTRACTOR SHALL WATER NEWLY PLANTED VEGETATION PRIOR TO MULCHING PLANTING PIT. ALL VOIDS SHALL BE FILLED AND SETTLING MITIGATED AS REQUIRED.
12. AFTER INITIAL WATERING AND PRIOR TO MULCHING, CONTRACTOR SHALL APPLY HERBICIDES AND PRE-EMERGENT HERBICIDES AS REQUIRED TO ELIMINATE ANY WEED SEEDS OR PLANTS PRESENT ON ROOT BALL.
13. ALL PLANTING BEDS AND PITS EXCEPT FOR LANDSCAPE ISLANDS ADJACENT TO THE BUILDING AND DESIGNATED AREA AT THE FUEL VENT STACKS, SHALL BE MULCHED WITH DOUBLE GROUND HARDWOOD MULCH AT A MINIMUM DEPTH OF 3". LANDSCAPE ISLANDS ADJACENT TO DESIGNATED AREA AT FUEL STACKS SHALL BE MULCHED WITH 1"-3" "RIVER STONE" MULCH AND RETAINED WITH AN ALUMINUM LANDSCAPE EDGING (PERMALOCK OR APPROVED EQUAL). FOR LANDSCAPES ADJACENT TO BUILDING, CONTACT PROJECT ENGINEER.
14. SEEDBED PREPARATION
   A. APPLY LIMESTONE AND FERTILIZER ACCORDING TO SOIL TESTS OR FERTILIZER MAY BE APPLIED AT THE RATE OF 260 POUNDS PER ACRE OR 6 POUNDS PER 1000 SQUARE FEET USING 10-20-10 OR EQUIVALENT. IN ADDITION, 300 POUNDS 4-1-2 PER ACRE OR EQUIVALENT OF SLOW RELEASE NITROGEN MAY BE USED IN LIEU OF TOPDRESSING.
   B. WORK LIME AND FERTILIZER INTO THE SOIL AS PRACTICAL TO A DEPTH OF 4-INCHES WITH A DISC, SPRING TOOTH HARROW OR OTHER SUITABLE EQUIPMENT. THE FINAL HARROWING OR DISKING OPERATION SHOULD PARALLEL TO THE GENERAL CONTOUR. CONTINUE TILLAGE UNTIL A REASONABLE UNIFORM, FINE SEEDBED IS PREPARED. ALL BUT CLAY OR SILTY SOILS AND COARSE SANDS SHOULD BE ROLLED TO FIRM THE SEEDBED WHEREVER FEASIBLE.
   C. INSPECT SEEDBED JUST BEFORE SEEDING. IF TRAFFIC HAS LEFT THE SOIL COMPACTED, THE AREA MUST BE RETILLED AND FIRMED AS OUTLINED BELOW.
   D. GRASS SEEDING MIXTURE AND APPLICATION RATE:

PERCENTAGE OF TOTAL WEIGHT	APPLICATION RATE	SEED TYPE	MIN. GERMINATION ALLOWED
60%	5-7 LBS/1000 S.F.	"REBEL" TALL FESCUE	90 - 97
35%		"YORKTOWN" PERENNIAL RYE	90 - 98
5%		"STREEKER" REDTOP	90 - 92

   E. IN AREAS DESIGNATED AS SOD, FESCUE SOD IS TO BE INSTALLED ON MINIMUM 4" TOPSOIL. AREAS TO BE SODDED ARE TO BE PREPARED AS NOTED ABOVE FOR SEEDED AREAS.
15. PLANT MATERIAL SHALL BE GUARANTEED FOR ONE YEAR FROM THE DATE OF SUBSTANTIAL COMPLETENESS. THE CONTRACTOR SHALL REPLACE PLANTS, DEAD, UNHEALTHY, DYING OR DAMAGED THROUGH LOSS OF BRANCHES AND/OR FOLIAGE. LAWNS THAT ARE NOT IN GOOD CONDITION AT THE END OF THE GUARANTEE PERIOD SHALL BE REPAIRED UNTIL A GOOD LAWN RESULTS. IT IS UNDERSTOOD THAT THE OWNER SHALL ASSUME RESPONSIBILITY FOR WATERING ALL PLANT MATERIAL AND LAWN AREA BEGINNING WITH THE DATE OF SUBSTANTIAL COMPLETENESS.

IRRIGATION SYSTEMS SPECIFICATIONS

1. ALL IRRIGATION SUPPLY, LATERAL WATER LINES AND SPRINKLER HEADS ARE TO BE LOCATED A MINIMUM OF 3" BEHIND CURB LINE.
2. MINIMUM BURIAL DEPTH FOR ALL SUPPLY AND LATERALS IS 18".
3. ALL LANDSCAPE AREA ADJACENT TO BUILDINGS AND PARKING AREAS AROUND BUILDINGS ARE TO BE IRRIGATED BY DRIP SYSTEMS.
4. LAWN AREAS OUTSIDE OF PERIMETER SIDEWALKS ARE TO BE DESIGN AND CONTROLLER PROGRAMMED TO IRRIGATE AT OFF-PEAK HOURS.
5. SPRINKLERS HEADS ARE TO BE THE FOLLOWING:
   RAIN BIRD 5000 SERIES
   RAIN BIRD 1804
   RAIN BIRD 1812
6. DRIP SYSTEMS ARE TO BE NETAFIN DRIPLINE, 18"X 18" SPACING WITH .9 GPH EMITTERS.
7. IRRIGATION CONTROLLER IS TO BE RAIN BIRD, ESP-16LX, AUTOMATIC CONTROLLER, LOCATED IN MECHANICAL ROOM OF BUILDING.
8. NO SUBSTITUTIONS OR DEVIATION FROM IRRIGATION PLAN WILL BE ALLOWED.
9. IRRIGATION SYSTEMS ARE TO BE WARRANTED BY INSTALLING CONTRACTOR FOR A PERIOD OF ONE YEAR FROM THE DATE OF CERTIFICATE OF OCCUPANCY. IRRIGATION CONTRACTOR IS TO PROVIDE ALL MAINTENANCE, ADJUSTMENT, PROGRAMMING AND WINTERIZATION DURING THE FIRST WARRANTY YEAR.
10. SEPARATE WATER METER TO BE FURNISH FOR IRRIGATION SYSTEM. (SUBJECT TO APPROVAL BY TOWNSHIP OR COUNTY UTILITY AUTHORITY).

NOTES:
1. NO SOIL OR MULCH SHALL BE PLACED AGAINST ROOT COLLAR OF PLANT.
2. REMOVE ALL ROPE FROM TRUNK & TOP OF ROOT BALL FOLD BURLAP BACK ⅓ FROM TOP ROOT BALL
3. PLANTING DEPTH SHALL BE THE SAME AS GROWN IN NURSERY.
4. THOROUGHLY SOAK THE ROOT BALL AND ADJACENT PREPARED SOIL SEVERAL TIMES DURING THE FIRST MONTH AFTER PLANTING AND REGULARLY THROUGHOUT THE FOLLOWING TWO SUMMERS.
5. THE BOTTOM OF PLANTING PIT EXCAVATIONS SHOULD BE ROUGH TO AVOID MATTING OF SOIL LAYERS AS NEW SOIL IS ADDED. IT IS PREFERABLE TO TILL THE FIRST LIFT (2 TO 3 IN.) OF PLANTING SOIL INTO THE SUBSOIL.

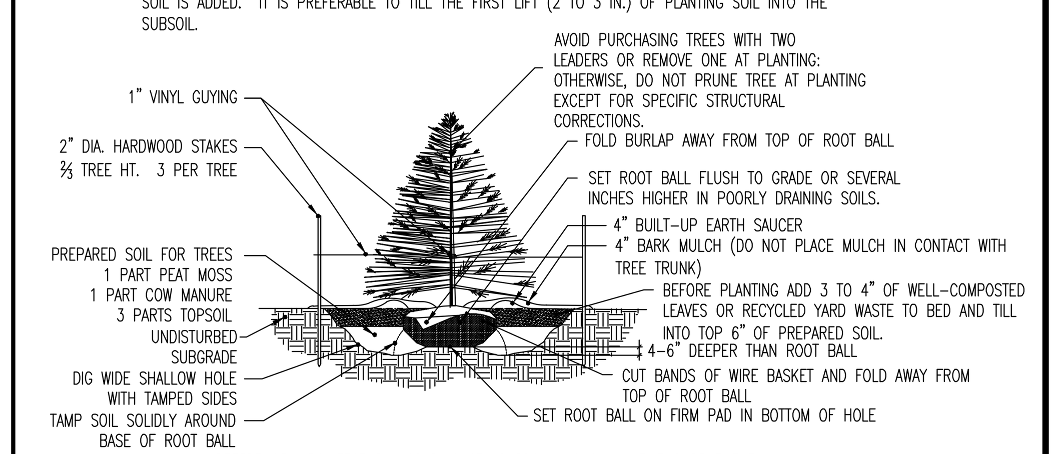

REFERENCE: ARCHITECTURAL GRAPHIC STANDARDS 1998 CUMULATIVE SUPPLEMENT.

EVERGREEN TREE PLANTING DETAIL

NOT TO SCALE

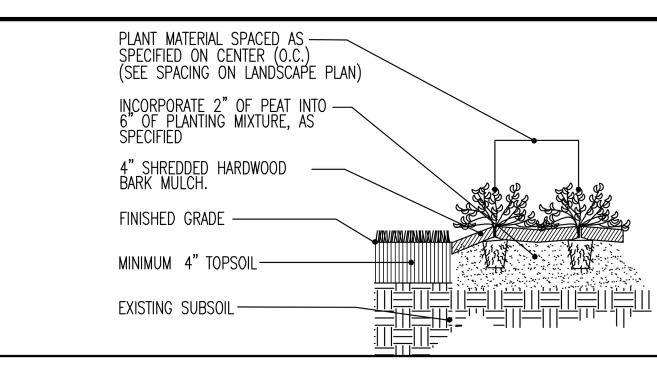

PERENNIAL/GROUND COVER PLANTING DETAIL

NOT TO SCALE

DYNAMIC • ENGINEERING • EARTH • SURVEY • TRAFFIC

REV.	DATE	COMMENTS	BY

THIS PLAN SET IS FOR PERMITTING PURPOSES ONLY AND MAY NOT BE USED FOR CONSTRUCTION

DRAWN BY:	DESIGNED BY:	CHECKED BY:	CHECKED BY:
LZ	MS	MAW	—

PROJECT: SWATARA PAXTON DEVELOPERS LLC
PROPOSED WAWA FOOD MARKET & FUELING STATION
PARCEL NO. 63-022-037
US ROUTE 322 & BRIDGE ROAD (SR 2018)
TOWNSHIP OF SWATARA, DAUPHIN COUNTY, PENNSYLVANIA

811 Know what's below. Call before you dig.
PROTECT YOURSELF
ALL STATES REQUIRE NOTIFICATION OF EXCAVATORS, DESIGNERS, OR ANY PERSON PREPARING TO DISTURB THE EARTH'S SURFACE ANYWHERE IN ANY STATE
FOR STATE SPECIFIC DIRECT PHONE NUMBERS VISIT: WWW.CALL811.COM

DYNAMIC ENGINEERING
LAND DEVELOPMENT CONSULTING • PERMITTING
GEOTECHNICAL • ENVIRONMENTAL
TRAFFIC • SURVEY • PLANNING & ZONING
826 Newtown Yardley Road
Suite 201, Newtown, PA 18940
T: 267.685.0276 | F: 267.685.0361
Offices conveniently located at:
Lake Como, New Jersey • T: 732.974.0198
Chester, New Jersey • T: 908.879.9229
Marlton, New Jersey • T: 856.334.2000
Newark, New Jersey • T: 973.755.7200
Toms River, New Jersey • T: 732.974.0198
Newtown, Pennsylvania • T: 267.685.0276
Philadelphia, Pennsylvania • T: 215.253.4888
Bethlehem, Pennsylvania • T: 610.598.4400
Allen, Texas • T: 972.534.2100
Houston, Texas • T: 281.789.6400
Austin, Texas • T: 512.646.2646
Delray Beach, Florida • T: 561.921.8570
Annapolis, Maryland • T: 410.567.5000
www.dynamicec.com

JUSTIN A. GEONNOTTI
PROFESSIONAL ENGINEER
PENNSYLVANIA LICENSE No. 080629

MARK A. WHITAKER
PROFESSIONAL ENGINEER
NEW JERSEY LICENSE No. 41417

TITLE: LANDSCAPING NOTES & DETAILS

SCALE: (H) AS (V) SHOWN
DATE: 11/21/2023
PROJECT No: 1478-99-212

SHEET No: 17 OF 34
Rev. #: 0

Plotted: 11/22/23 - 12:44 PM, By: ajwright
File: P:\DECPC PROJECTS\1478 Paramount Realty\99-212 Swatara PA\Dwg\Land Dev Plans\D1478992125L0.dwg, ---> 17 LANDSCAPING NOTES & DETAILS

COPYRIGHT © 2023 - DYNAMIC ENGINEERING CONSULTANTS, PC - ALL RIGHTS RESERVED

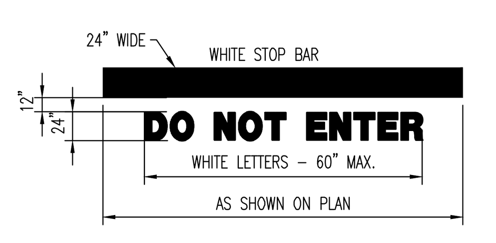

NOTE: USE THERMOPLASTIC PAINT

DO NOT ENTER STRIPING DETAIL
NOT TO SCALE

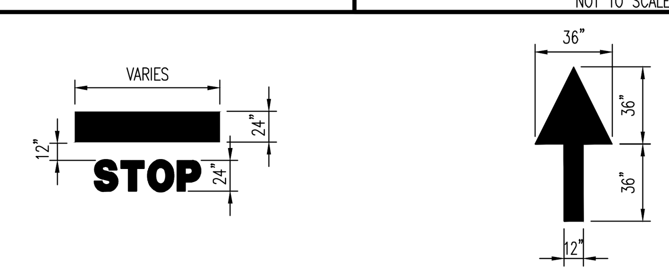

NOTE: ARROWS AND WORDS CAN BE ARRANGED IN OTHER COMBINATIONS THAN THOSE ILLUSTRATED HERE TO ACHIEVE DESIRED RESULT. ALL PAINT TO BE THERMOPLASTIC.

PAINTED MARKING DETAILS
NOT TO SCALE

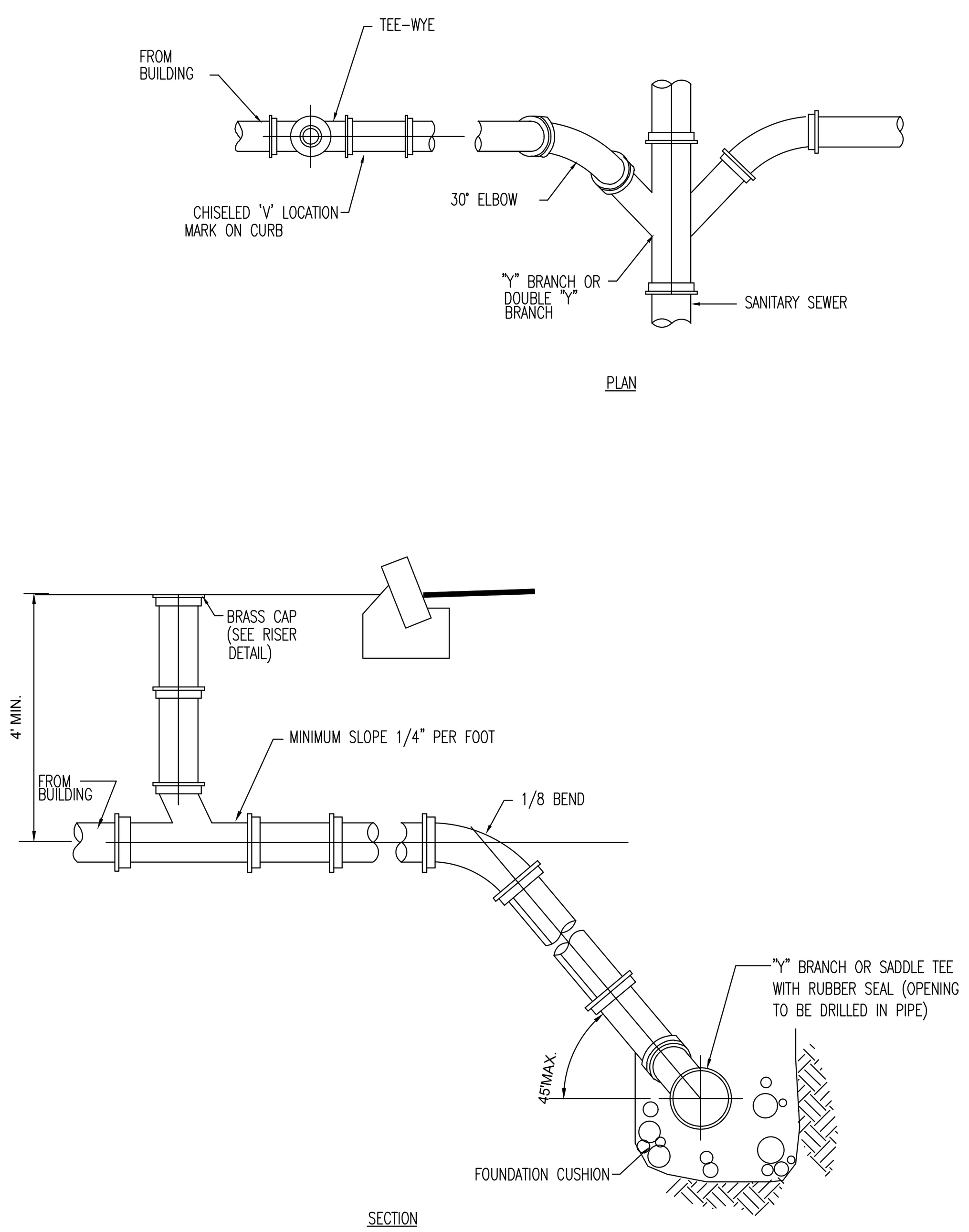

NOTE: 1. REFER TO UTILITY PLAN FOR PIPE SIZES, VERIFY WITH ARCHITECTURAL PLANS.
2. CONTACT ENGINEER WITH ANY CONFLICTS PRIOR TO ANY SEWER CONNECTION WORK.

STANDARD CONNECTION DETAIL
NOT TO SCALE

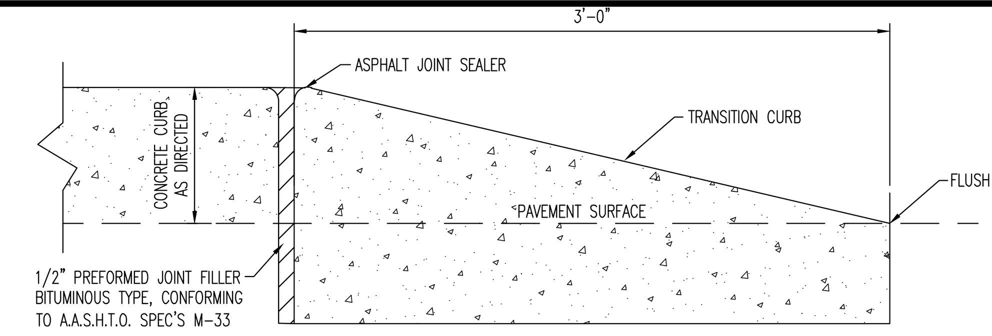

NOTE: SEE CURB DETAIL FOR MATERIAL SPECIFICATIONS, BEDDING REQUIREMENTS, ETC.

VERTICAL CURB TAPER DETAIL
NOT TO SCALE

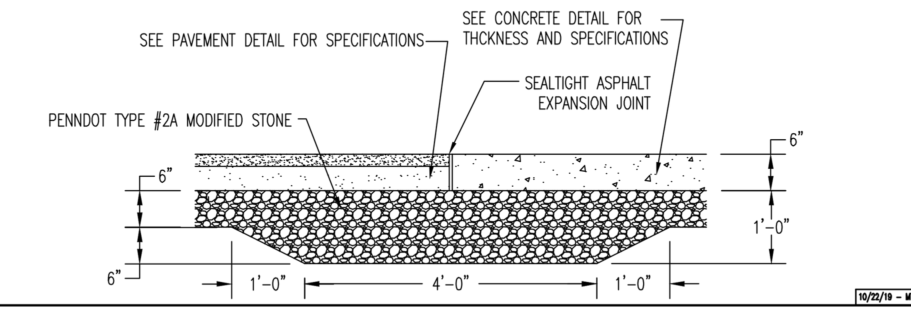

10/22/19 – MTM/JAG

CONCRETE TO ASPHALT TRANSITION DETAIL
NOT TO SCALE

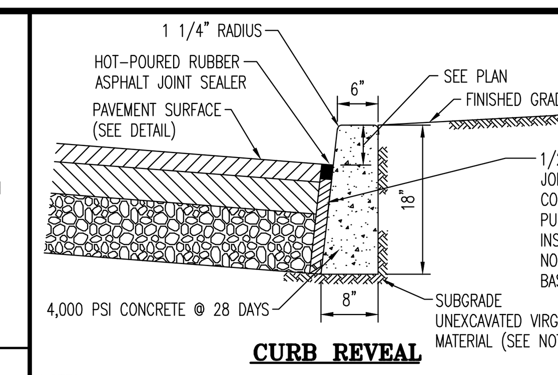

NOTES:
1. ANY EXCAVATION BELOW DESIRED GRADE DUE TO OVER EXCAVATION OR WET SOIL CONDITIONS SHALL BE BACKFILLED WITH PENNDOT NO. 2A STONE. ALL SUBGRADES SHALL BE APPROVED BY THE TOWNSHIP ENGINEER PRIOR TO POURING.
2. TRANSVERSE JOINTS 1/2" WIDE SHALL BE INSTALLED IN THE CURB 20'–0" APART AND SHALL BE FILLED WITH PREFORMED, BITUMINOUS–IMPREGNATED FIBER JOINT FILLER, COMPLYING WITH THE REQUIREMENTS OF PENNDOT PUBLICATION 408, RECESSED 1/4" FROM THE FRONT FACE AND TOP OF THE CURB.
3. DUMMY JOINTS (FORMED) SHALL BE INSTALLED MIDWAY BETWEEN EXPANSION JOINTS.
4. WIDTH OF JOINT FILLER STRIP EQUAL TO THE THICKNESS OF THE PAVEMENT LESS 1/2".
5. ANY CHANGE IN LEVELS SHALL BE ¼" MAX. HEIGHT OR ½" MAX. HEIGHT WITH BEVELED EDGE SLOPE OF 1:2 (50%) MAX.

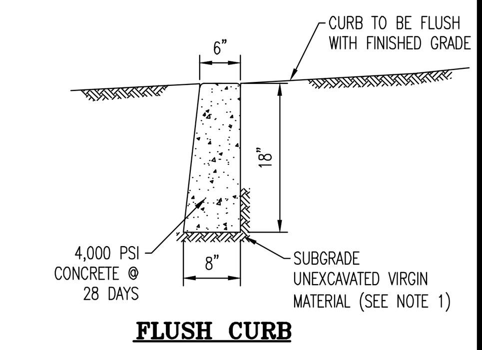

10/22/19 – MTM/JAG

CONCRETE CURB DETAIL
NOT TO SCALE

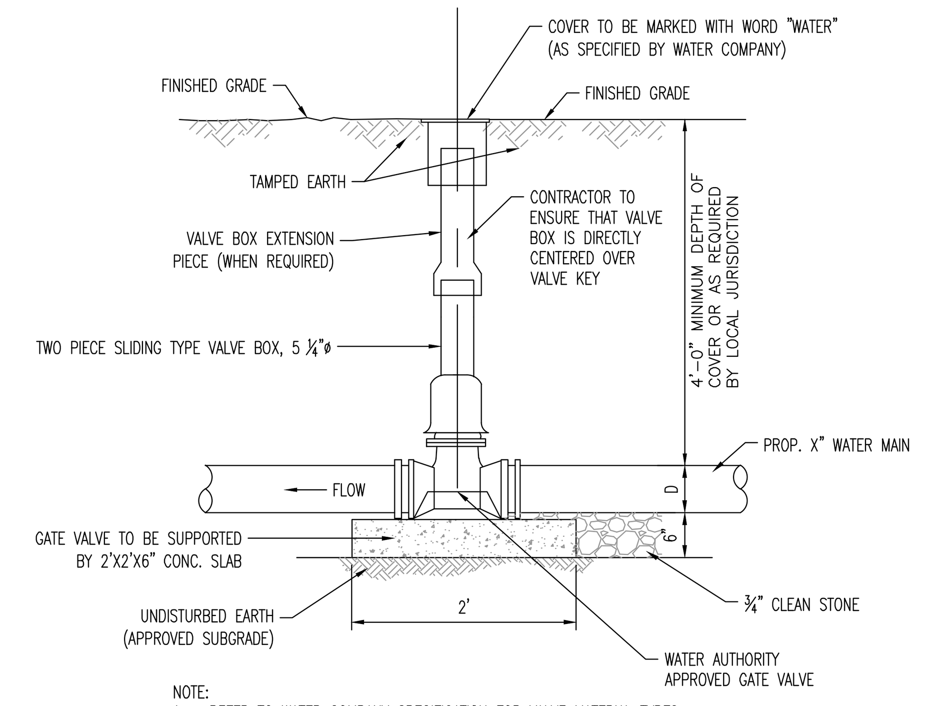

NOTE:
1. REFER TO WATER COMPANY SPECIFICATION FOR VALVE MATERIAL TYPES.
2. PRIVATE FIRE MAIN SHALL BE BURIED IN ACCORDANCE WITH LATEST NFPA REGULATIONS.

GATE VALVE AND BOX DETAIL
NOT TO SCALE

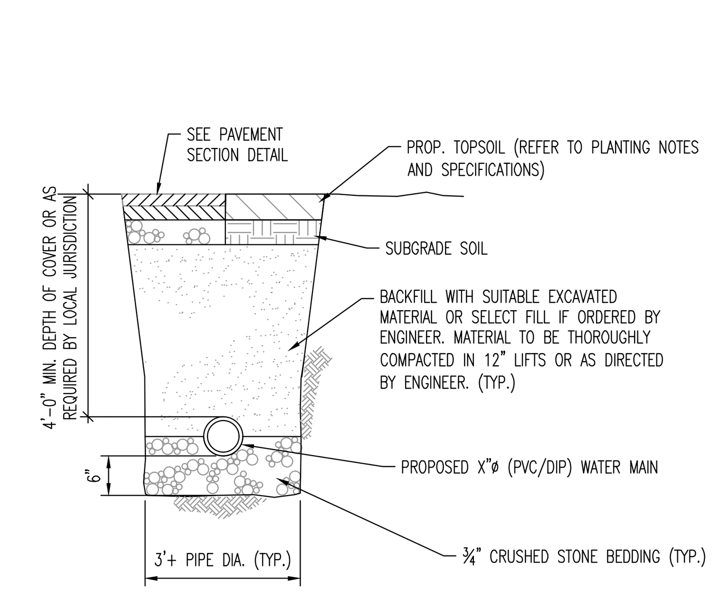

NOTE:
1. PAVEMENT SECTION AS PER ASPHALT PAVING DETAIL OR TO MATCH ADJOINING EXISTING PAVEMENT SECTION.
2. X" – SEE PLAN FOR PIPE DIAMETER.
3. PRIVATE FIRE WATER MAINS SHALL BE BURIED IN ACCORDANCE WITH LATEST NFPA REGULATIONS.

WATER MAIN TRENCH DETAIL
NOT TO SCALE

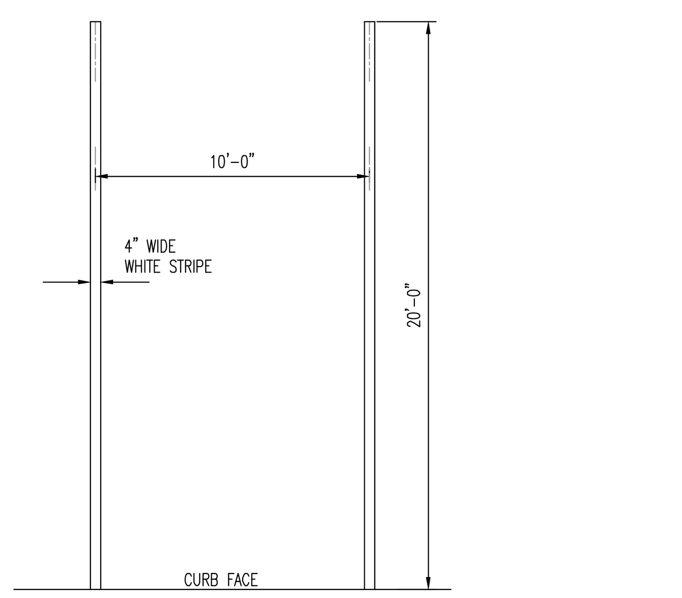

PARKING STALL STRIPING DETAIL
NOT TO SCALE

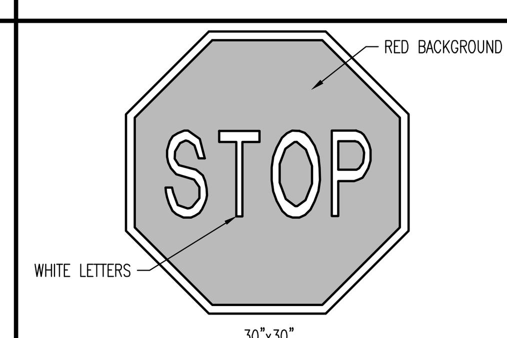

R1-1 SIGN DETAIL
NOT TO SCALE

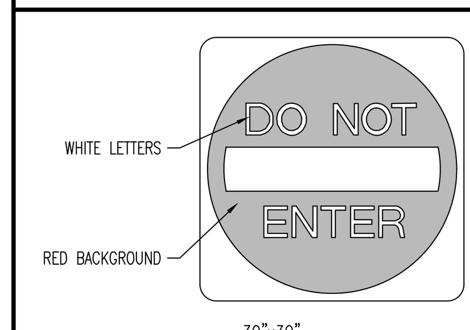

R5-1 SIGN DETAIL
NOT TO SCALE

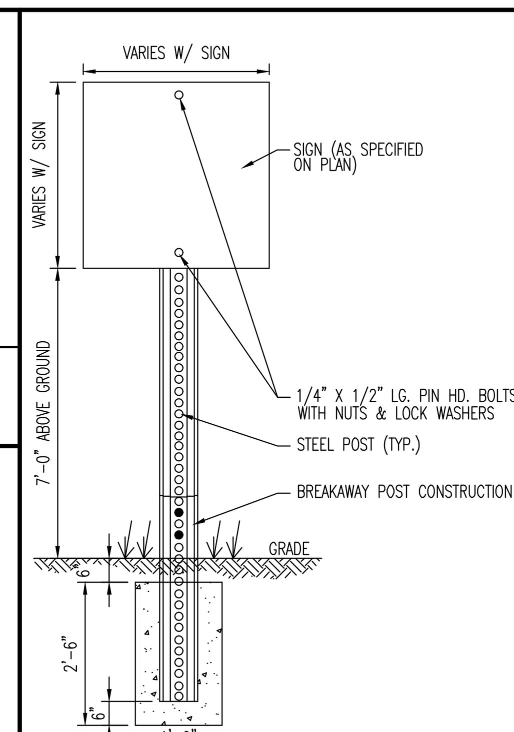

SIGN POST & FOOTING DETAIL
NOT TO SCALE

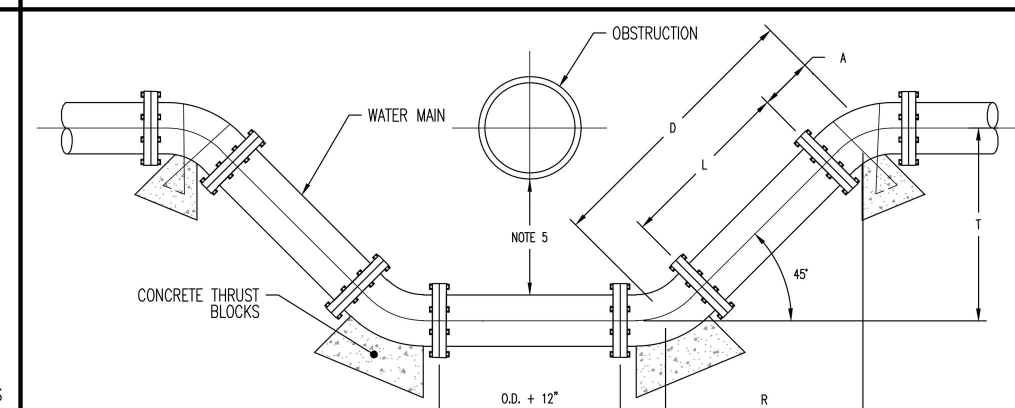

NOTES:
1. WATER MAIN MAY BE LOOPED ABOVE OBSTRUCTION, IF 3.5' MINIMUM COVER IS MAINTAINED ABOVE WATER MAIN.
2. WATER MAIN SHALL BE DUCTILE IRON CEMENT LINED PIPE, ALL JOINTS SHALL BE MECHANICALLY JOINED OR PUSH–ON AND ALL FITTINGS BE MECHANICALLY JOINED CAST IRON.
3. OFFSETS MAY BE SUBSTITUTED FOR A TEE OF UP TO 24" IF APPROVED BY THE ENGINEER.
4. CONCRETE THRUST BLOCKS SHALL BE PROVIDED AT ALL BENDS OR OTHER POINTS OF PIPE DIRECTION CHANGE.
5. MINIMUM VERTICAL CLEARANCE BETWEEN SANITARY SEWER AND WATER MAIN SHALL BE 18". CLEARANCE BETWEEN WATER MAIN AND OTHER OBSTRUCTIONS SHALL BE 6".
6. TIE RODS SHALL BE UTILIZED TO RESTRAIN PIPE JOINTS. DETAILS OF TIE ROD ASSEMBLY SHALL BE SUBMITTED TO THE ENGINEER FOR APPROVAL. TIE RODS SHALL BE SUFFICIENT TO RESTRAIN THE THRUST DEVELOPED AT 100 PSI WORKING PRESSURE. MEGALUG RESTRAINT ALSO ACCEPTABLE IN PLACE OF TIE RODS.

MECHANICAL JOINTS

ANGLE	D =	R =	L =
45*	T x 1.414	T x 1.000	D–2A
22.5*	T x 2.613	T x 2.414	D–2A
11.25*	T x 5.126	T x 5.027	D–2A

8/26/15 – EW/JCS

WATER MAIN - UTILITY CROSSING DETAIL
NOT TO SCALE

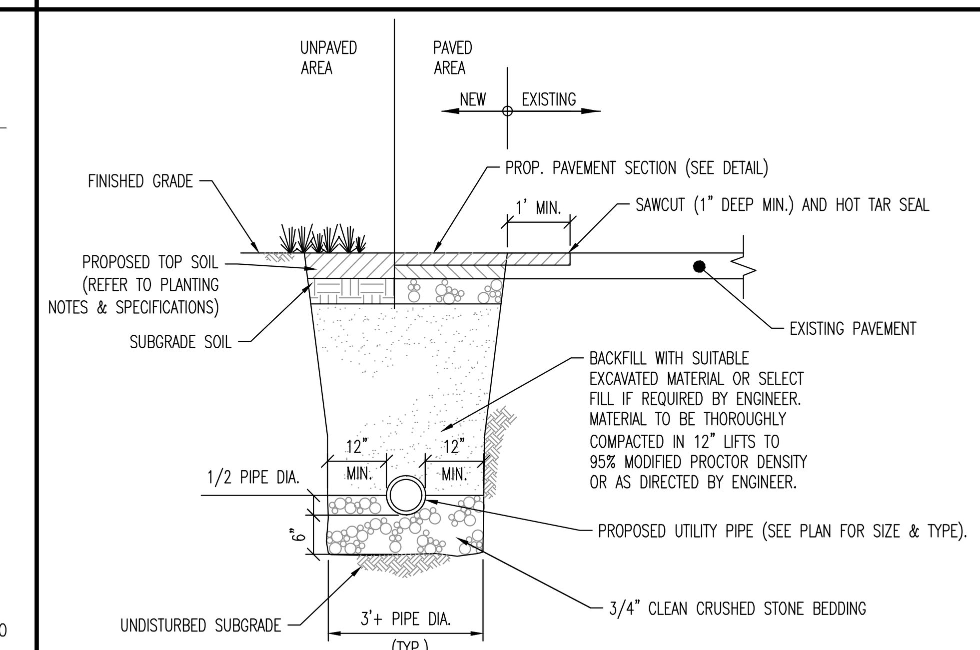

NOTES:
1. PAVEMENT SECTION SHALL BE PER PAVEMENT DETAIL, OR TO MATCH ADJOINING EXISTING PAVEMENT SECTION.
2. ALL CONSTRUCTION SHALL BE IN ACCORDANCE WITH THE LATEST OSHA STANDARDS.
3. ALL TRENCHES IN EXISTING PAYMENT SHALL BE SAWCUT
4. ALL DISTURBED TRAFFIC STRIPING AND PAVEMENT MARKING SHALL BE REPLACED WITHIN KIND MATERIALS.

7/8/16 – RJC/PH

UTILITY SERVICE TRENCH DETAIL
NOT TO SCALE

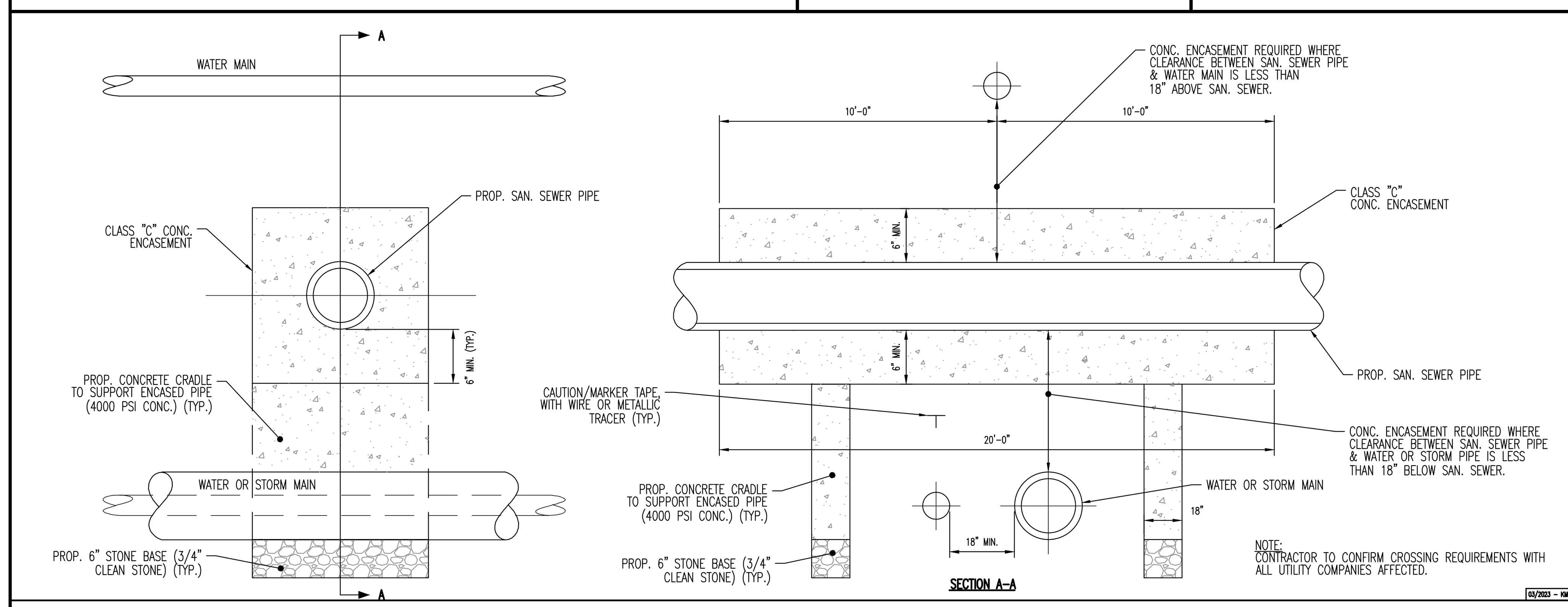

NOTE: CONTRACTOR TO CONFIRM CROSSING REQUIREMENTS WITH ALL UTILITY COMPANIES AFFECTED.

03/2023 – KMG/JGA

CONCRETE ENCASEMENT DETAIL
NOT TO SCALE

TAPPING NOTES:
1. INSTALLATION OF TAPPING SLEEVE AND VALVE AND INSERTION VALVE SHALL BE CONDUCTED UNDER "WET" CONDITIONS. EXISTING MAINS SHALL BE LEFT IN SERVICE AT ALL TIMES DURING TAPPING OR INSERTION.
2. CONCRETE THRUST BLOCK UNDER VALVES SHALL HAVE A SOIL BEARING EQUAL TO THAT OF A 45° ELBOW.

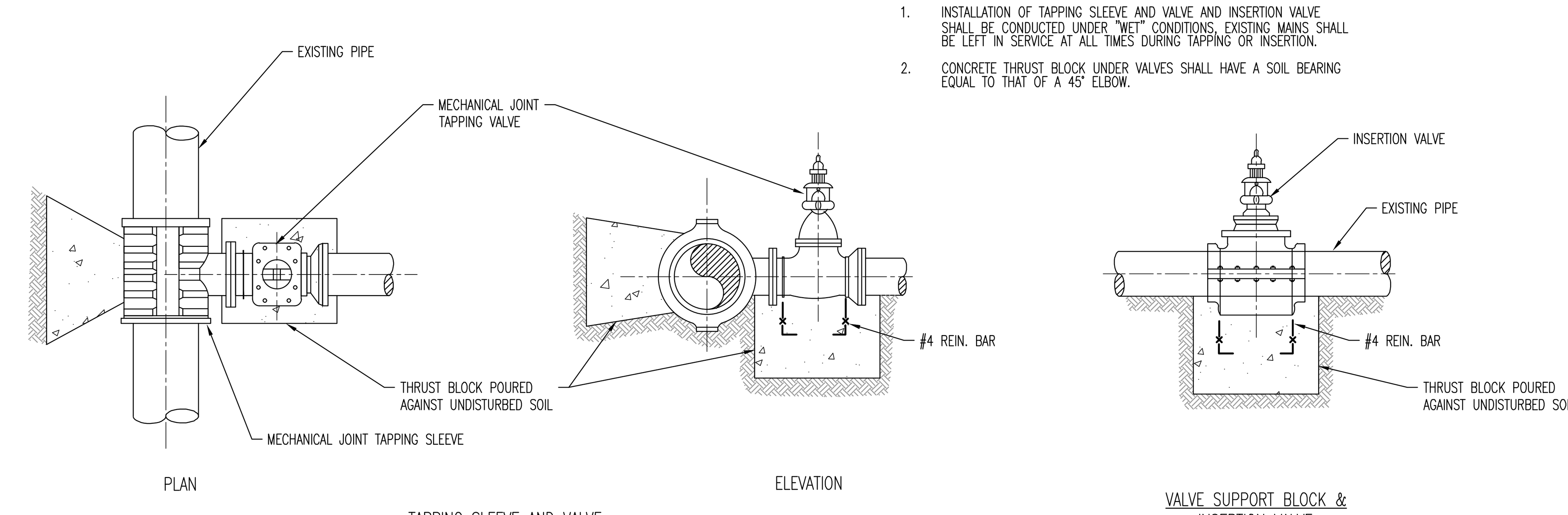

WET TAP DETAIL
NOT TO SCALE

DYNAMIC • ENGINEERING • EARTH • SURVEY • TRAFFIC

REV.	DATE	COMMENTS	BY

THIS PLAN SET IS FOR PERMITTING PURPOSES ONLY AND MAY NOT BE USED FOR CONSTRUCTION

DRAWN BY: CMC | DESIGNED BY: MS | CHECKED BY: MAW | CHECKED BY: –

PROJECT: **SWATARA PAXTON DEVELOPERS LLC**
PROPOSED WAWA FOOD MARKET & FUELING STATION
PARCEL NO. 63–022–037
US ROUTE 322 & BRIDGE ROAD (SR 2018)
TOWNSHIP OF SWATARA, DAUPHIN COUNTY, PENNSYLVANIA

811 Know what's below. Call before you dig.
PROTECT YOURSELF
ALL STATES REQUIRE NOTIFICATION OF EXCAVATORS, DESIGNERS, OR ANY PERSON PREPARING TO DISTURB THE EARTH'S SURFACE ANYWHERE IN ANY STATE
FOR STATE SPECIFIC DIRECT PHONE NUMBERS VISIT: WWW.CALL811.COM

DYNAMIC ENGINEERING
LAND DEVELOPMENT CONSULTING • PERMITTING
GEOTECHNICAL • ENVIRONMENTAL
TRAFFIC • SURVEY • PLANNING & ZONING
826 Newtown Yardley Road
Suite 201, Newtown, PA 18940
T: 267.685.0276 | F: 267.685.0361
Offices conveniently located at:
Lake Como, New Jersey • T: 732.974.0198
Chester, New Jersey • T: 908.879.9229
Marlton, New Jersey • T: 856.334.2000
Newark, New Jersey • T: 973.755.7200
Toms River, New Jersey • T: 732.974.0198
Newtown, Pennsylvania • T: 267.685.0276
Philadelphia, Pennsylvania • T: 215.253.4888
Bethlehem, Pennsylvania • T: 610.598.4400
Allen, Texas • T: 972.534.2100
Houston, Texas • T: 281.789.6400
Austin, Texas • T: 512.646.2646
Delray Beach, Florida • T: 561.921.8570
Annapolis, Maryland • T: 410.567.5000
www.dynamicec.com

JUSTIN A. GEONNOTTI
PROFESSIONAL ENGINEER
PENNSYLVANIA LICENSE No. 080629

MARK A. WHITAKER
PROFESSIONAL ENGINEER
NEW JERSEY LICENSE No. 41417

TITLE: CONSTRUCTION DETAILS

SCALE: (H) AS (V) SHOWN | DATE: 11/21/2023
PROJECT No: 1478–99–212

SHEET No: 18 OF 34 | Rev. #: 0

Plotted: 11/22/23 – 12:41 PM, By: nschechter
File: P:\DECPC PROJECTS\1478 Paramount Realty\99–212 Swatara PA\Dwg\Land Dev Plans\D147899212SD0.dwg, ---> 18 CONSTRUCTION DETAILS

COPYRIGHT © 2023 – DYNAMIC ENGINEERING CONSULTANTS, PC – ALL RIGHTS RESERVED

14/23

APPENDIX B

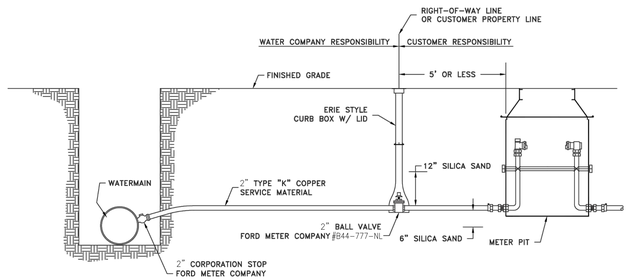

NOTES;

1) SILICA SAND BACKFILL FOR ALL COPPER AND BRASS
2) IF DIP MAIN IS LESS THAN 8" IN DIAMETER, A SERVICE SADDLE IS REQUIRED
3) A SERVICE SADDLE IS REQUIRED FOR ALL PVC AND PET WATERMAIN

THIS DRAWING IS PROVIDED BY VEOLIA WATER PENNSYLVANIA FOR DISPLAY AND IS SUBJECT TO CHANGE WITHOUT NOTICE. NO CLAIMS, EITHER REAL OR ASSUMED AS TO ABSOLUTE OR RELATIVE ACCURACY OR PRECISION OF ANY DATA CONTAINED HEREIN ARE MADE BY VEOLIA WATER PENNSYLVANIA, NOR WILL THE COMPANY BE HELD RESPONSIBLE FOR ANY USE OF THIS DOCUMENT FOR PURPOSES OTHER THAN WHICH IT IS INTENDED.

NO.	REVISION	DATE

VEOLIA

VEOLIA WATER PENNSYLVANIA
4310 ALLENTOWN BLVD
HARRISBURG, PENNSYLVANIA 17112

DWG NAME: TYPICAL 2" SERVICE INSTALLATION FOR 8" AND LARGER WATERMAIN

DRAWN BY	SCALE	DATE	CAD FILE NAME
DRP	N.T.S.	11-27-17	SWPA-TYP DWG

15

14/22

APPENDIX B

Note;
Meter setting must match meter size as specified by VWPA. If reducers are required, they are the responsibility of the owner.

NOTE: METER PIT MAY NOT BE INSTALLED IN VEHICLE TRAFFIC AREAS

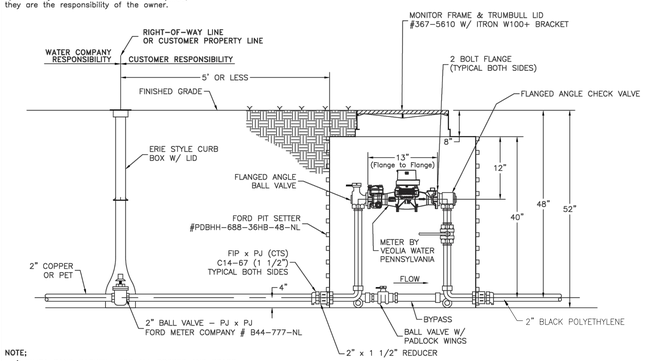

NOTE;

1) SILICA SAND BACKFILL FOR ALL COPPER AND BRASS

THIS DRAWING IS PROVIDED BY VEOLIA WATER PENNSYLVANIA FOR DISPLAY AND IS SUBJECT TO CHANGE WITHOUT NOTICE. NO CLAIMS, EITHER REAL OR ASSUMED AS TO ABSOLUTE OR RELATIVE ACCURACY OR PRECISION OF ANY DATA CONTAINED HEREIN ARE MADE BY VEOLIA WATER PENNSYLVANIA, NOR WILL THE COMPANY BE HELD RESPONSIBLE FOR ANY USE OF THIS DOCUMENT FOR PURPOSES OTHER THAN WHICH IT IS INTENDED.

NO.	REVISION	DATE

VEOLIA

VEOLIA WATER PENNSYLVANIA
4310 ALLENTOWN BLVD
HARRISBURG, PENNSYLVANIA 17112

DWG NAME: TYPICAL 1 1/2" METER PIT SETTER INSTALLATION

DRAWN BY	SCALE	DATE	CAD FILE NAME
DRP	N.T.S.	11-27-17	SWPA-TYP DWG

21

Plotted: 11/22/23 - 12:41 PM, By: nschechter
File: P:\DEDPC PROJECTS\1478 Paxmount Realty\99-212 Swatara PA\Dwg\Land Dev Plans\D147899212SSO.DWG, ---> 19 CONSTRUCTION DETAILS

COPYRIGHT © 2023 - DYNAMIC ENGINEERING CONSULTANTS, PC - ALL RIGHTS RESERVED

DYNAMIC
ENGINEERING CONSULTANTS
SURVEY • TRAFFIC

REV.	DATE	COMMENTS	BY

THIS PLAN SET IS FOR PERMITTING PURPOSES ONLY AND MAY NOT BE USED FOR CONSTRUCTION

DRAWN BY: LZ
DESIGNED BY: MS
CHECKED BY: MAW
CHECKED BY: -

PROJECT: SWATARA PAXTON DEVELOPERS LLC
PROPOSED WAWA FOOD MARKET & FUELING STATION
PARCEL NO. 63-022-037
US ROUTE 322 & BRIDGE ROAD (SR 2018)
TOWNSHIP OF SWATARA, DAUPHIN COUNTY, PENNSYLVANIA

811 Know what's below. Call before you dig.
PROTECT YOURSELF
ALL STATES REQUIRE NOTIFICATION OF EXCAVATORS, DESIGNERS, OR ANY PERSON PREPARING TO DISTURB THE EARTH'S SURFACE ANYWHERE IN ANY STATE
FOR STATE SPECIFIC DIRECT PHONE NUMBERS VISIT: WWW.CALL811.COM

DYNAMIC ENGINEERING
LAND DEVELOPMENT CONSULTING • PERMITTING
GEOTECHNICAL • ENVIRONMENTAL
TRAFFIC • SURVEY • PLANNING & ZONING
826 Newtown Yardley Road
Suite 201, Newtown, PA 18940
T: 267.685.0276 | F: 267.685.0361
Offices conveniently located at:
Lake Carmel, New Jersey • T: 732.712.9178
Chester, New Jersey • T: 908.879.9229
Wall-Ocean, New Jersey • T: 732.774.2000
Neptune, New Jersey • T: 973.735.7200
Toms River, New Jersey • T: 732.974.0198
Newtown, Pennsylvania • T: 267.685.0276
Philadelphia, Pennsylvania • T: 215.232.4888
Bethlehem, Pennsylvania • T: 610.398.4400
Allen, Texas • T: 972.334.7700
Houston, Texas • T: 281.789.6400
Kyle, Texas • T: 512.644.7544
Delray Beach, Florida • T: 561.921.8370
Annapolis, Maryland • T: 410.547.5000
www.dynamicec.com

JUSTIN A. GEONNOTTI
PROFESSIONAL ENGINEER
PENNSYLVANIA LICENSE No. PE-086629

MARK A. WHITAKER
PROFESSIONAL ENGINEER
NEW JERSEY LICENSE No. 41417

TITLE: CONSTRUCTION DETAILS

SCALE: (H) AS (V) SHOWN
DATE: 11/21/2023
PROJECT No: 1478-99-212

SHEET No: 19 OF 34
Rev. #: 0

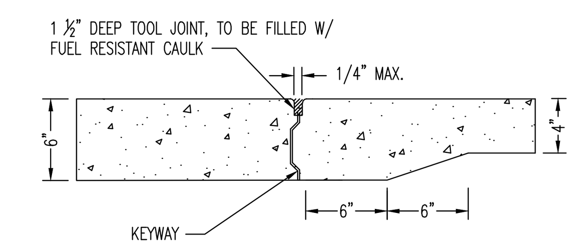

CONSTRUCTION JOINT DETAIL
SEE ARCH. SPEC. FOR COMPLETE CONCRETE DETAILS

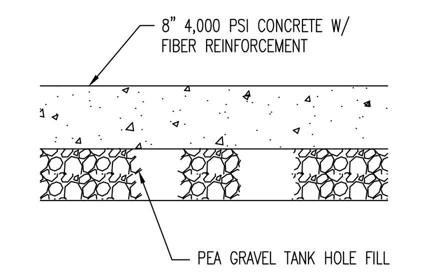

TANK MAT DETAIL
SEE ARCH. SPEC. FOR COMPLETE CONCRETE DETAILS

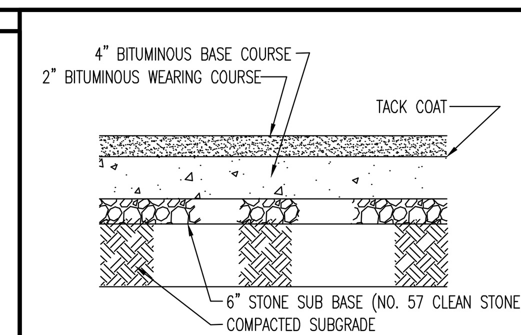

BITUMINOUS PAVING DETAIL
NOT TO SCALE

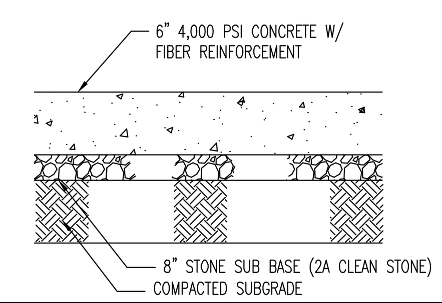

PARKING & CANOPY CONCRETE DETAIL
SEE ARCH. SPEC. FOR COMPLETE CONCRETE DETAILS

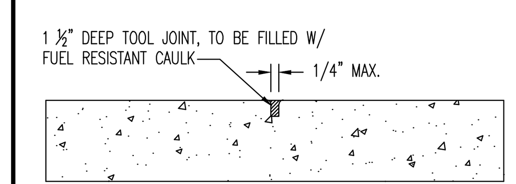

CONTROL JOINT DETAIL
SEE ARCH. SPEC. FOR COMPLETE CONCRETE DETAILS

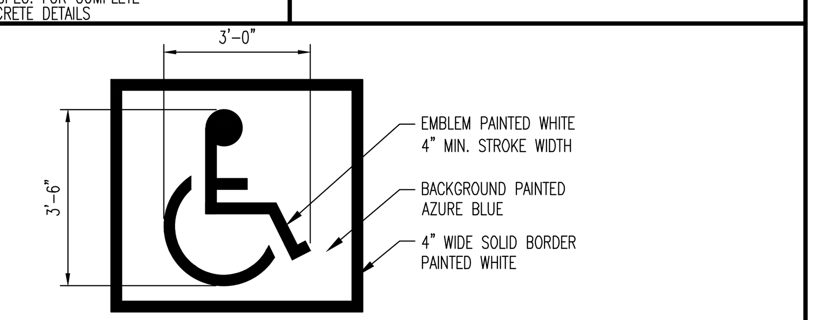

NOTE: ALL PAVEMENT STRIPING, MARKINGS & APPLICABLE SIGNAGE SHALL BE CONSTRUCTED IN ACCORDANCE WITH THE LATEST A.D.A. ACCESSIBILITY GUIDELINES.

INTERNATIONAL SYMBOL OF ACCESSIBILITY
NOT TO SCALE

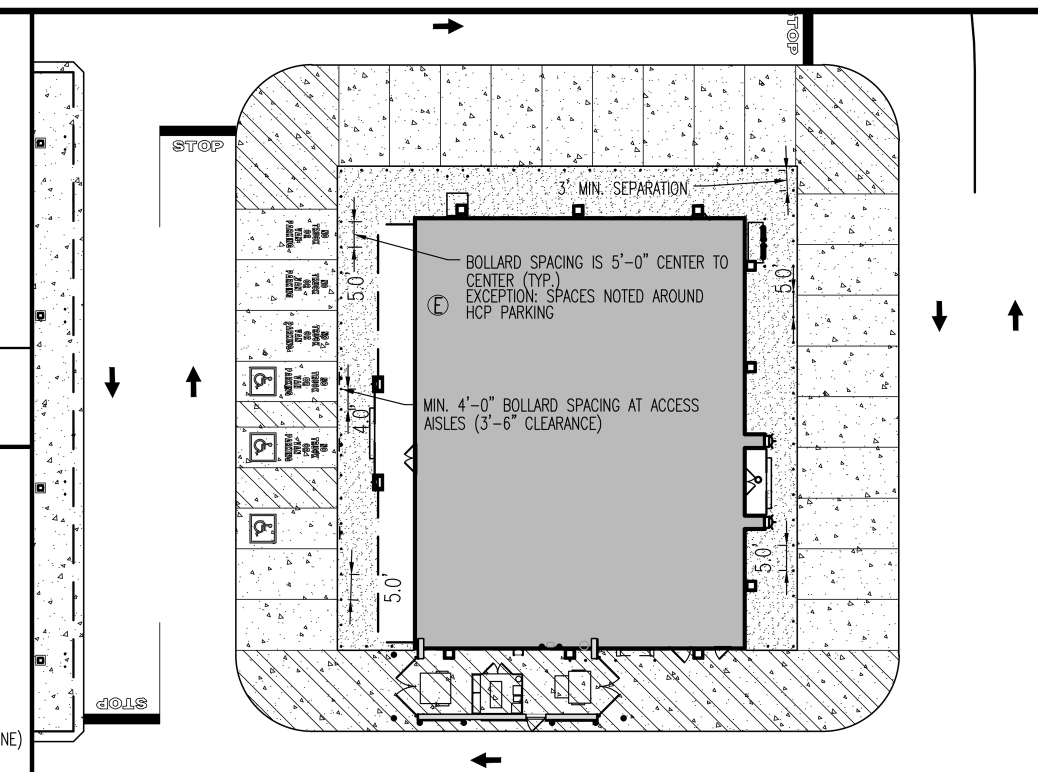

STRIPING & BOLLARD PLACEMENT DETAIL
NOT TO SCALE

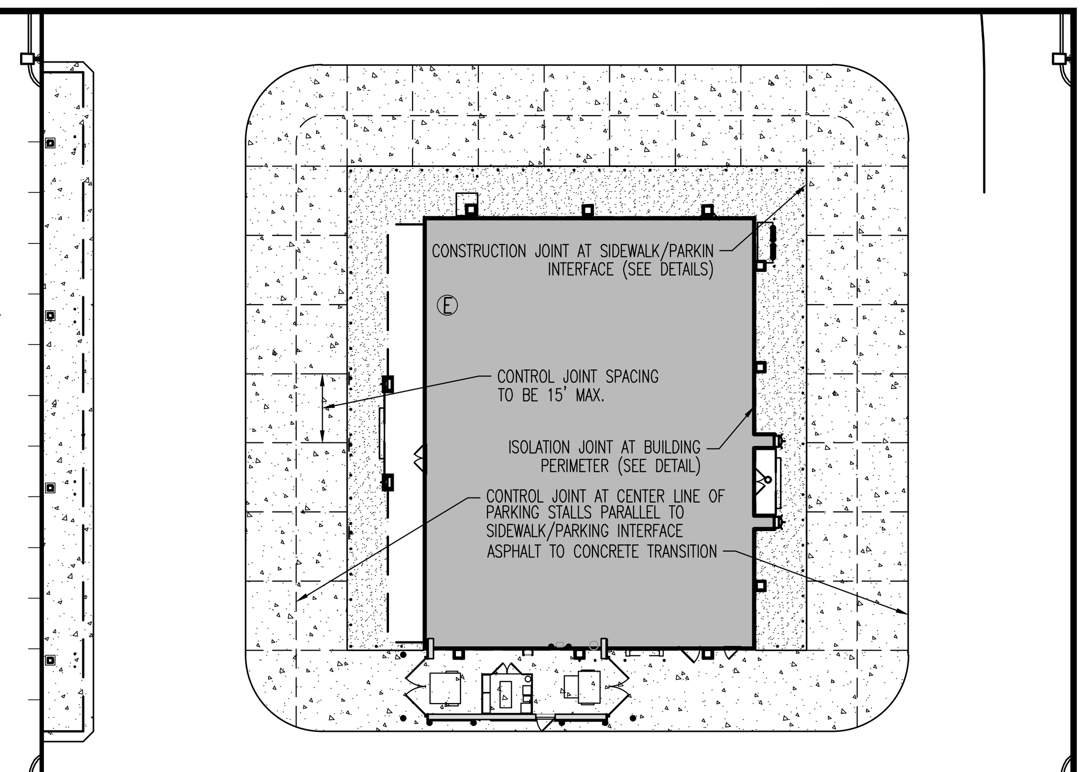

PARKING CONTROL JOINT PLAN
NOT TO SCALE

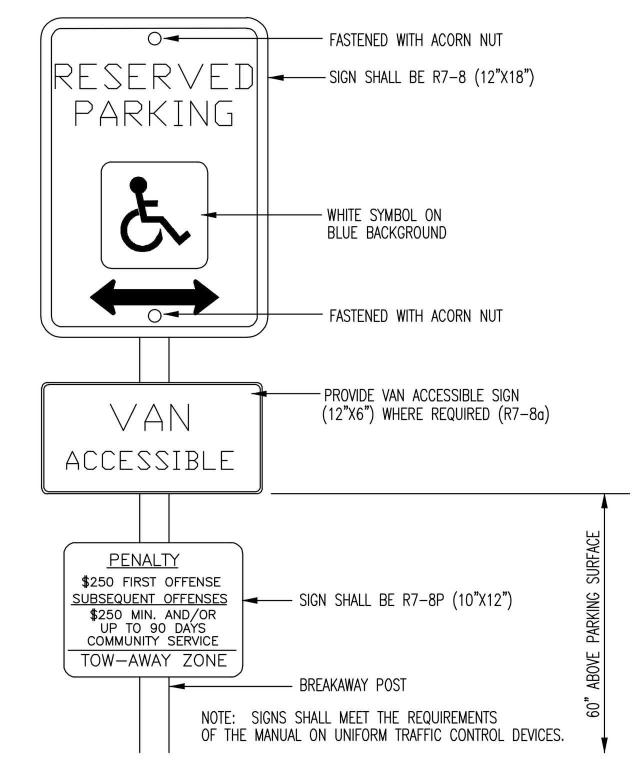

ACCESSIBLE PARKING SIGN
N.T.S.

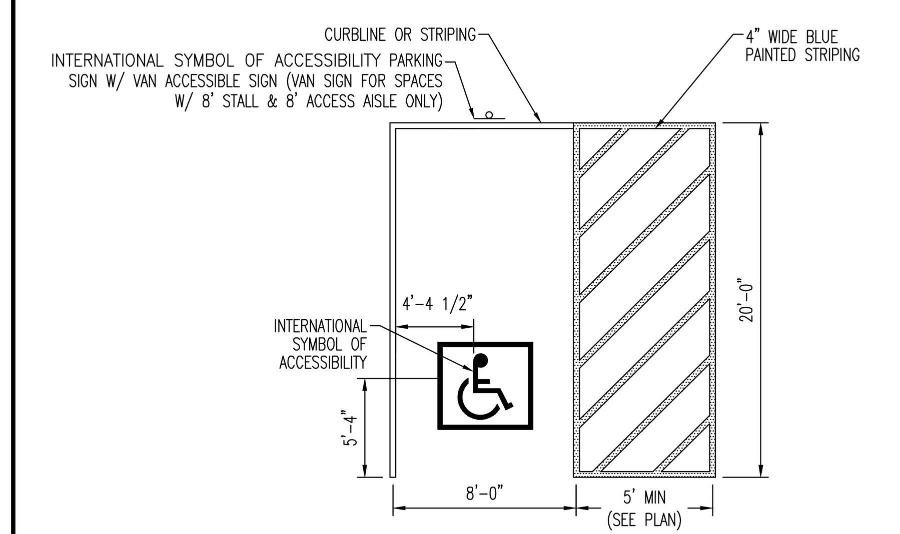

NOTES:

1. ADA PARKING STALL AND ACCESS AISLE SLOPE TO BE 1.5% MAX FOR NEW CONSTRUCTION.
2. PAVEMENT STRIPING FOR ALL ADA PARKING SPACES SHALL BE PAINTED AZURE BLUE.
3. WHERE AN ADA PARKING STALL MEETS A STANDARD PARKING STALL, AN AZURE BLUE AND WHITE PAVEMENT STRIPE SHALL BE PAINTED.
4. ALL PAVEMENT STRIPING, MARKINGS AND SIGNAGE SHALL BE CONSTRUCTED IN ACCORDANCE WITH THE LATEST ADA ACCESSIBILITY GUIDELINES.

INTERNATIONAL SYMBOL OF ACCESSIBILITY STALL MARKINGS (TWP STANDARD)
NOT TO SCALE

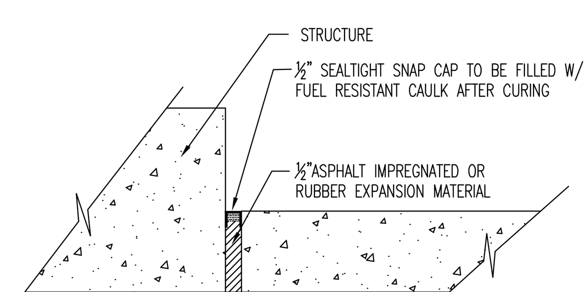

ISOLATION JOINT DETAIL
AT STRUCTURES SUCH AS GAS ISLANDS, BUILDING CANOPY COLUMNS, ETC.
SEE ARCH. SPEC. FOR COMPLETE CONCRETE DETAILS

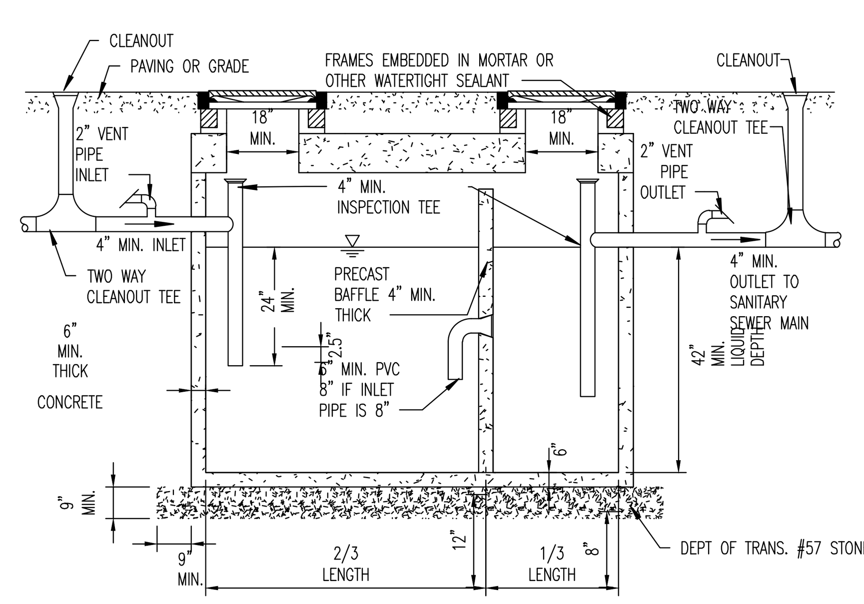

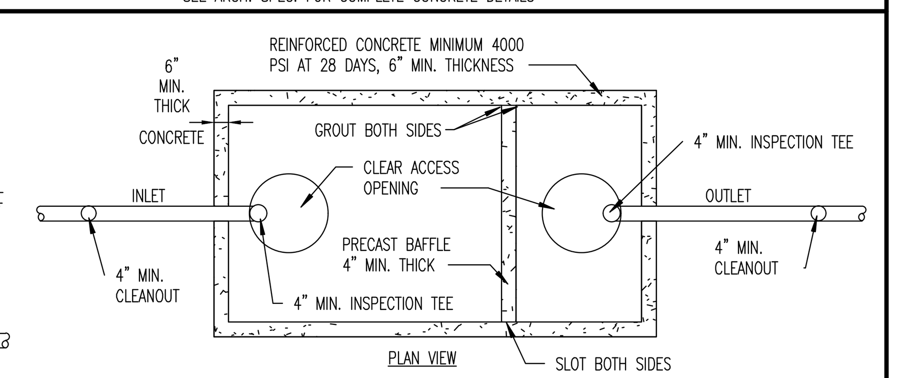

NOTES:

1. SPECIFIC DESIGN DETAILS MUST, IN ALL ASPECTS, MEET JURISDICTION'S APPLICABLE PLUMBING AND ADMINISTRATIVE CODE.
2. SIZE GREASE INTERCEPTOR AT 1750 GALLONS.
3. INTERCEPTORS SHALL BE WATER AND GAS TIGHT.
4. ALL FIXTURES LOCATED IN FOOD & BEVERAGE PREPARATION AREAS SHALL BE ROUTED THROUGH GREASE INTERCEPTOR.
5. RESTROOM WASTE SHALL NOT BE ROUTED THROUGH INTERCEPTOR.
6. BAFFLE REQUIRED. DESIGN MUST MEET JURISDICTION'S PLUMBING AND ADMINISTRATIVE CODE.
7. LOADS: H-20 TRUCK WHEELS WITH 30% IMPACT PER AASHTO. TRAFFIC BEARING FRAME AND COVER TO MEET JURISDICTION'S DEPT. OF TRANSPORTATION STANDARDS IF APPLICABLE.

GREASE TRAP
NOT TO SCALE

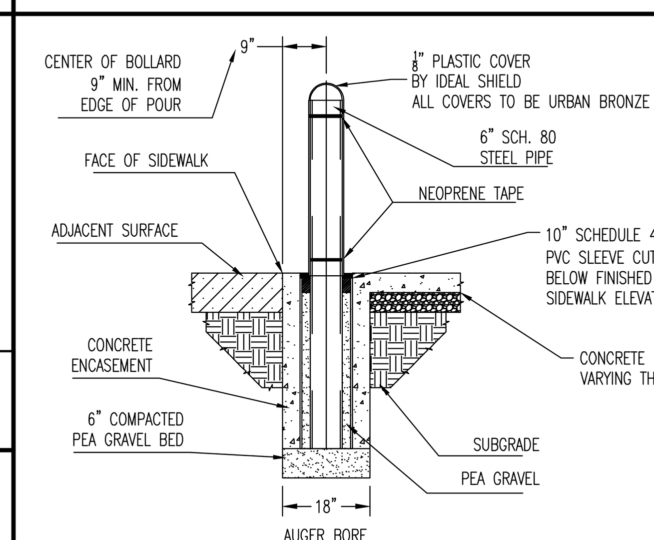

CONCRETE AREAS

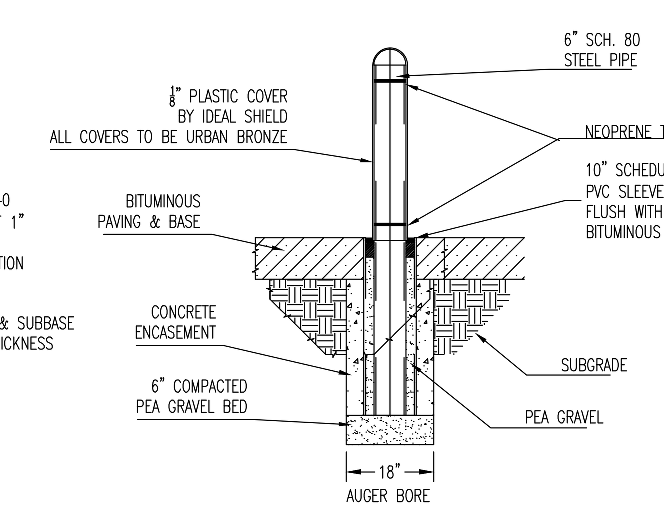

BITUMINOUS AREAS

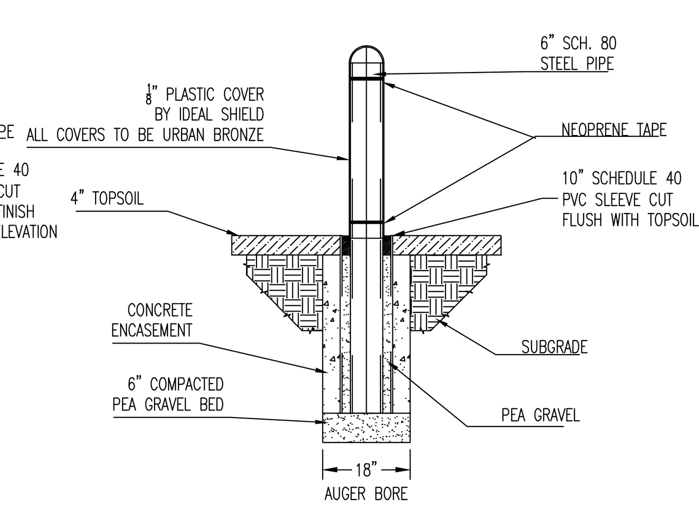

LANDSCAPED AREAS

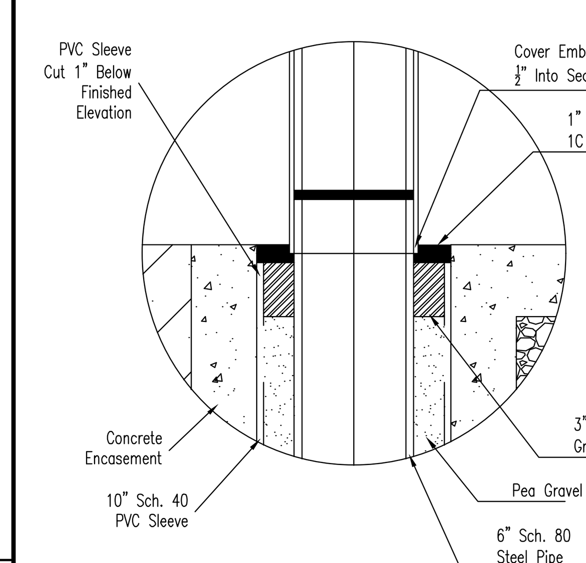

GENERAL DETAILS AND CAULK/GROUT DETAIL FOR CONCRETE AREAS

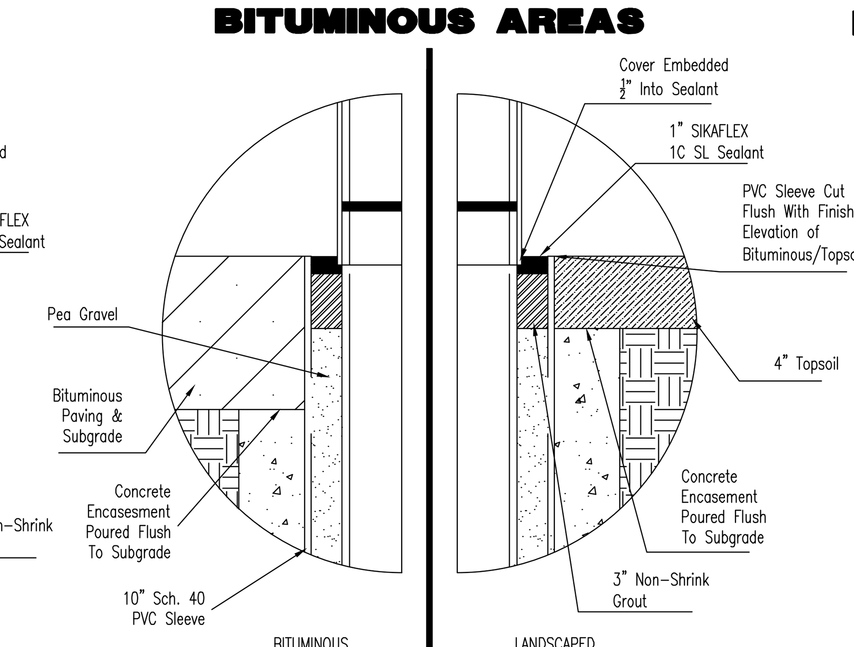

CAULK/GROUT DETAIL FOR LANDSCAPED & BITUMINOUS AREAS

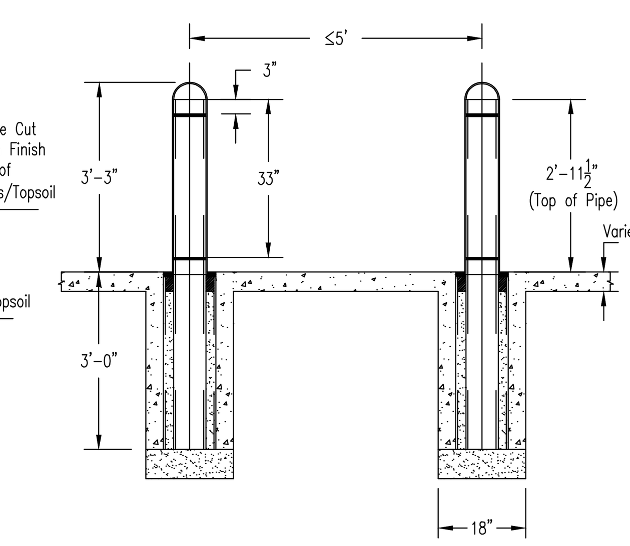

GENERAL BOLLARD DIMENSIONS AND SPACING AROUND BUILDING

WAWA BOLLARD DETAIL
(NEW CONSTRUCTION)
NOT TO SCALE

DYNAMIC
• ENGINEERING • EARTH • SURVEY • TRAFFIC

REV.	DATE	COMMENTS	BY

THIS PLAN SET IS FOR PERMITTING PURPOSES ONLY AND MAY NOT BE USED FOR CONSTRUCTION

DRAWN BY: CMC
DESIGNED BY: MS
CHECKED BY: MAW
CHECKED BY: -

PROJECT:
SWATARA PAXTON DEVELOPERS LLC
PROPOSED WAWA FOOD MARKET & FUELING STATION
PARCEL NO. 63-022-037
US ROUTE 322 & BRIDGE ROAD (SR 2018)
TOWNSHIP OF SWATARA, DAUPHIN COUNTY, PENNSYLVANIA

811 Know what's below. Call before you dig.
PROTECT YOURSELF
ALL STATES REQUIRE NOTIFICATION OF EXCAVATORS, DESIGNERS, OR ANY PERSON PREPARING TO DISTURB THE EARTH'S SURFACE ANYWHERE IN ANY STATE
FOR STATE SPECIFIC DIRECT PHONE NUMBERS VISIT: WWW.CALL811.COM

DYNAMIC ENGINEERING
LAND DEVELOPMENT CONSULTING • PERMITTING
GEOTECHNICAL • ENVIRONMENTAL
TRAFFIC • SURVEY • PLANNING & ZONING
826 Newtown Yardley Road
Suite 201, Newtown, PA 18940
T: 267.685.0276 | F: 267.685.0361
Offices conveniently located at:
Lake Como, New Jersey • T: 732.974.0198
Chester, New Jersey • T: 908.879.9229
Marlton, New Jersey • T: 856.334.2000
Newark, New Jersey • T: 973.755.7200
Toms River, New Jersey • T: 732.974.0198
Newtown, Pennsylvania • T: 267.685.0276
Philadelphia, Pennsylvania • T: 215.253.4888
Bethlehem, Pennsylvania • T: 610.598.4400
Allen, Texas • T: 972.534.2100
Houston, Texas • T: 281.789.6400
Austin, Texas • T: 512.646.2646
Delray Beach, Florida • T: 561.921.8570
Annapolis, Maryland • T: 410.567.5000
www.dynamicec.com

JUSTIN A. GEONNOTTI
PROFESSIONAL ENGINEER
PENNSYLVANIA LICENSE No. 080629

MARK A. WHITAKER
PROFESSIONAL ENGINEER
NEW JERSEY LICENSE No. 41417

TITLE: WAWA CONSTRUCTION DETAILS

SCALE: (H) AS (V) SHOWN
DATE: 11/21/2023
PROJECT No: 1478-99-212

SHEET No: 20 OF 34
Rev. #: 0

Plotted: 11/22/23 - 12:41 PM, By: nschechter
File: P:\DECPC PROJECTS\1478 Paramount Realty\99-212 Swatara PA\Dwg\Land Dev Plans\D1478992125D0.dwg, ---> 20 WAWA CONSTRUCTION DETAILS

COPYRIGHT © 2023 - DYNAMIC ENGINEERING CONSULTANTS, PC - ALL RIGHTS RESERVED

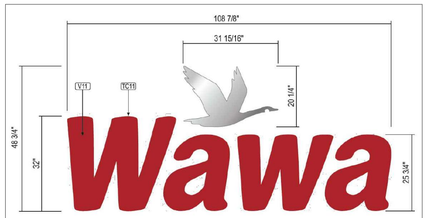

TOTAL AREA
36.90 S.F.

PROPOSED 32" INDIVIDUAL ILLUMINATED CHANNEL LETTERS & LOGO

NOT TO SCALE

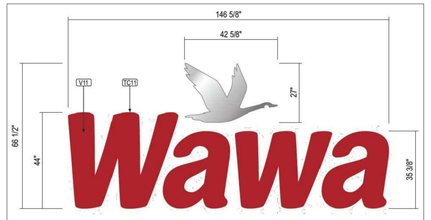

TOTAL AREA
67.70 S.F.

PROPOSED 44" INDIVIDUAL ILLUMINATED CHANNEL LETTERS & LOGO

NOT TO SCALE

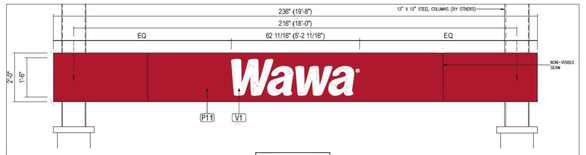

TOTAL AREA
7.84 S.F.

PROPOSED NON-ILLUMINATED GAS PUMP SPANNER (STACKED PUMPS)

NOT TO SCALE

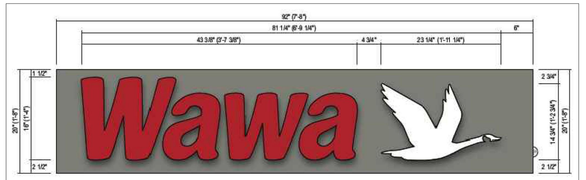

TOTAL AREA
9.02 S.F.

PROPOSED LED ILLUMINATED WALL CANOPY SIGN

NOT TO SCALE

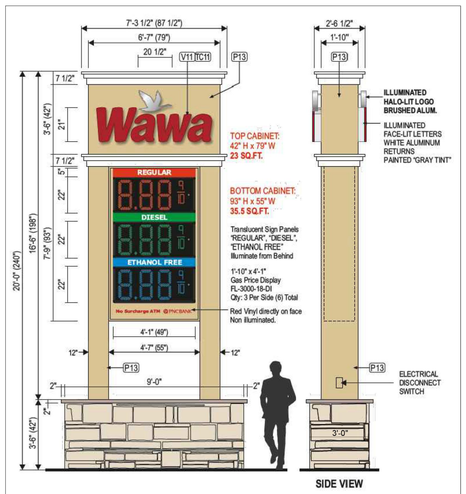

TOTAL AREA
58.5 S.F.

(P-50)-3 PRODUCT-18" PROPOSED DOUBLE FACED INTERNALLY ILLUMINATED WAWA FREESTANDING PYLON SIGN W/L.E.D. PRICE CHANGER

NOT TO SCALE

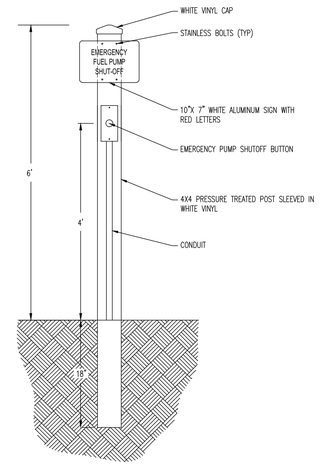

EMERGENCY PUMP SHUTOFF DETAIL

NOT TO SCALE

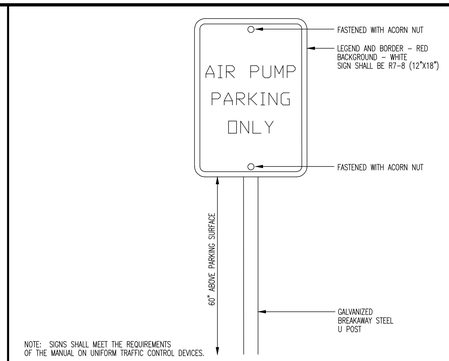

AIR PARKING SIGN

N.T.S.

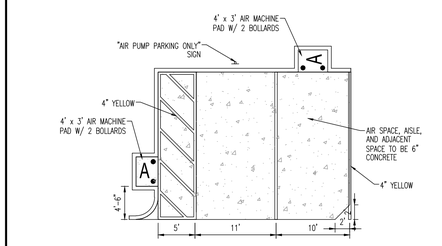

AIR SPACE PARKING DETAIL

NOT TO SCALE

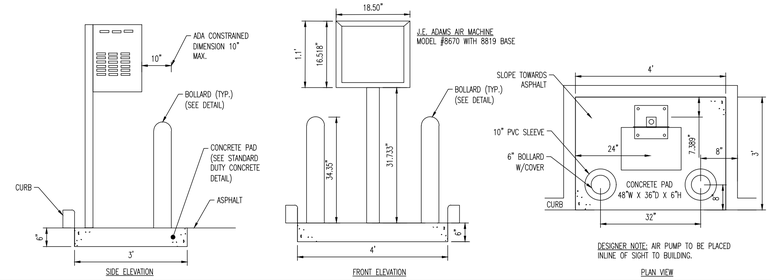

AIR PUMP STAND DETAIL

(J.E. ADAMS AIR MACHINE MODEL #8670)

NOT TO SCALE

Plotted: 11/22/23 – 12:41 PM, By: nschechter
File: P:\DEEPC PROJECTS\1478 Paramount Realty\99-212 Swatara PA\Dwg\Land Dev Plans\D1478999212SDD.DWG, ---> 21 WAWA CONSTRUCTION DETAILS

COPYRIGHT © 2023 – DYNAMIC ENGINEERING CONSULTANTS, PC – ALL RIGHTS RESERVED

DYNAMIC ENGINEERING CONSULTANTS, PC
• ENGINEERS • PLANNERS • LANDSCAPE ARCHITECTS
• SURVEYORS • TRAFFIC •

REV.	DATE	COMMENTS	BY

THIS PLAN SET IS FOR PERMITTING PURPOSES ONLY AND MAY NOT BE USED FOR CONSTRUCTION

DRAWN BY: LZ | DESIGNED BY: MS | CHECKED BY: MAW | CHECKED BY: –

PROJECT: **SWATARA PAXTON DEVELOPERS LLC**
PROPOSED WAWA FOOD MARKET & FUELING STATION
PARCEL NO. 63-022-037
US ROUTE 322 & BRIDGE ROAD (SR 2018)
TOWNSHIP OF SWATARA, DAUPHIN COUNTY, PENNSYLVANIA

811 Know what's below. Call before you dig.
PROTECT YOURSELF
ALL STATES REQUIRE NOTIFICATION OF EXCAVATORS, DESIGNERS, OR ANY PERSON PREPARING TO DISTURB THE EARTH'S SURFACE ANYWHERE IN ANY STATE
FOR STATE SPECIFIC DIRECT PHONE NUMBERS VISIT: WWW.CALL811.COM

DYNAMIC ENGINEERING
LAND DEVELOPMENT CONSULTING • PERMITTING
GEOTECHNICAL • ENVIRONMENTAL
TRAFFIC • SURVEY • PLANNING & ZONING
826 Newtown Yardley Road
Suite 201, Newtown, PA 18940
T: 267.685.0276 | F: 267.685.0361
Offices conveniently located at:
DEEP Center, New Jersey • T: 732.919.2118
Chanel, New Jersey • T: 908.879.9229
Midtown, New Jersey • T: 856.334.2000
Newark, New Jersey • T: 973.733.7200
Toms River, New Jersey • T: 732.914.0198
Newtown, Pennsylvania • T: 267.685.0276
Philadelphia, Pennsylvania • T: 215.233.4888
Bethlehem, Pennsylvania • T: 610.395.4400
Allyn, Texas • T: 972.324.3100
Houston, Texas • T: 281.799.6400
Aventura, Florida • T: 305.644.7614
Delray Beach, Florida • T: 561.912.8370
Annapolis, Maryland • T: 410.647.3000
www.dynamicec.com

JUSTIN A. GEONNOTTI
PROFESSIONAL ENGINEER
PENNSYLVANIA LICENSE No. PE080629

MARK A. WHITAKER
PROFESSIONAL ENGINEER
NEW JERSEY LICENSE No. 41417

TITLE: WAWA CONSTRUCTION DETAILS

SCALE: (H) AS (V) SHOWN | DATE: 11/21/2023
PROJECT No: 1478-99-212

SHEET No: 21 OF 34 | Rev. #: 0

THIS PLAN TO BE UTILIZED FOR VEHICLE CIRCULATION PURPOSES ONLY

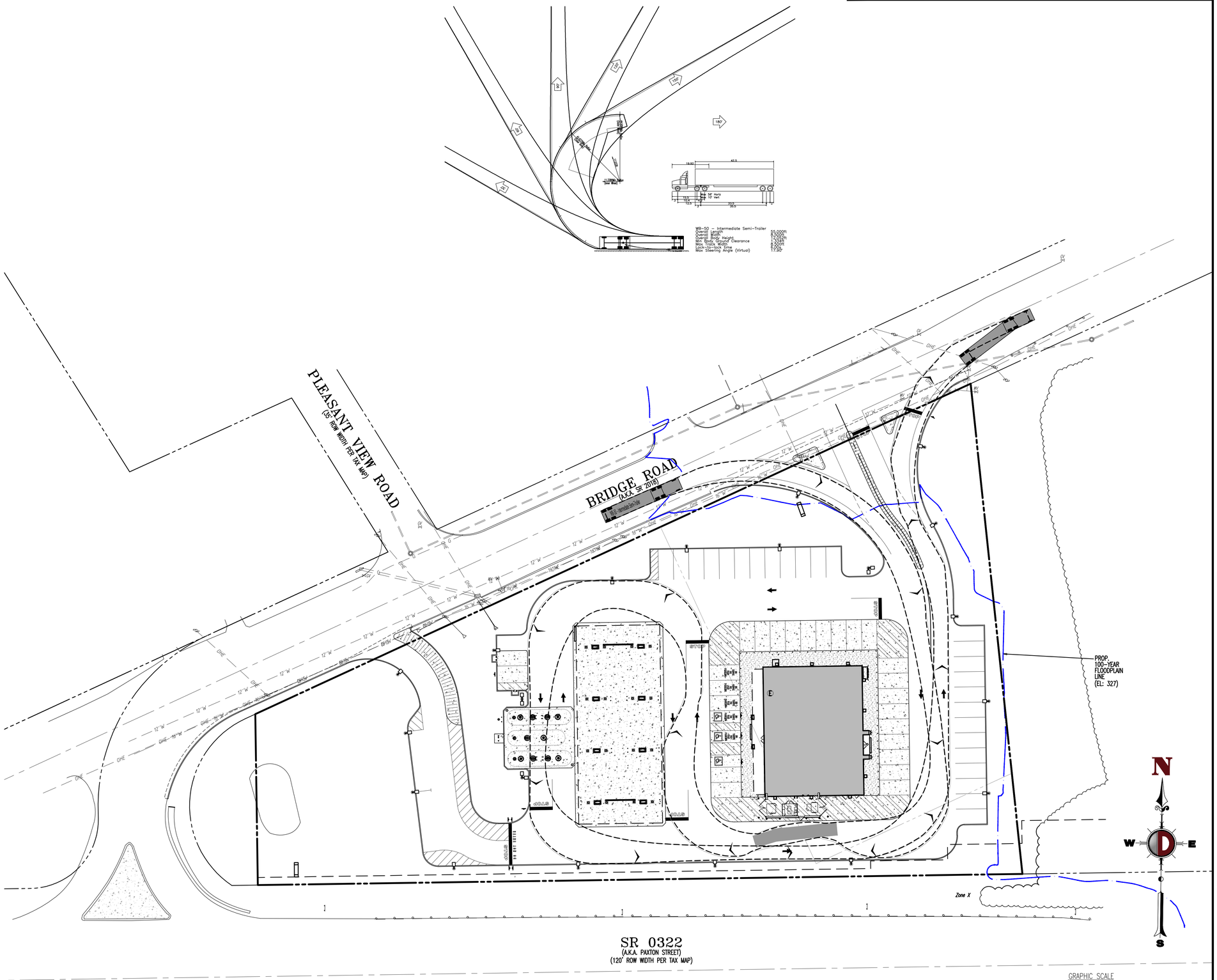

Plotted: 11/22/23 – 12:42 PM, By: nschechter
File: P:\DECPC PROJECTS\1478 Paramount Realty\99-212 Swatara PA\Dwg\Land Dev Plans\D147899212SV0.dwg, ---> 22 VEHICLE CIRCULATION PLAN (WB-50)

COPYRIGHT © 2023 – DYNAMIC ENGINEERING CONSULTANTS, PC – ALL RIGHTS RESERVED

DYNAMIC ENGINEERING CONSULTANTS, PC
• ENGINEERING • PLANNING • ENVIRONMENTAL • SURVEY • TRAFFIC

REV.	DATE	COMMENTS	BY

THIS PLAN SET IS FOR PERMITTING PURPOSES ONLY AND MAY NOT BE USED FOR CONSTRUCTION

DRAWN BY: CMC | DESIGNED BY: MS | CHECKED BY: MAW | CHECKED BY: –

PROJECT: **SWATARA PAXTON DEVELOPERS LLC**
PROPOSED WAWA FOOD MARKET & FUELING STATION
PARCEL NO. 63-022-037
US ROUTE 322 & BRIDGE ROAD (SR 2018)
TOWNSHIP OF SWATARA, DAUPHIN COUNTY, PENNSYLVANIA

811 Know what's below. Call before you dig.
PROTECT YOURSELF
ALL STATES REQUIRE NOTIFICATION OF EXCAVATORS, DESIGNERS, OR ANY PERSON PREPARING TO DISTURB THE EARTH'S SURFACE ANYWHERE IN ANY STATE
FOR STATE SPECIFIC DIRECT PHONE NUMBERS VISIT: WWW.CALL811.COM

DYNAMIC ENGINEERING
LAND DEVELOPMENT CONSULTING • PERMITTING
GEOTECHNICAL • ENVIRONMENTAL
TRAFFIC • SURVEY • PLANNING & ZONING
826 Newtown Yardley Road
Suite 201, Newtown, PA 18940
T: 267.685.0276 | F: 267.685.0361
Offices conveniently located at:
Lakehurst, New Jersey • T: 732.914.0178
Clinton, New Jersey • T: 908.879.9229
Wall-Ho, New Jersey • T: 854.314.2000
Newark, New Jersey • T: 973.733.7200
Toms River, New Jersey • T: 732.914.0178
Newtown, Pennsylvania • T: 267.685.0276
Philadelphia, Pennsylvania • T: 215.253.4888
Bethlehem, Pennsylvania • T: 610.398.4400
Allen, Texas • T: 972.534.7700
Houston, Texas • T: 281.789.6400
Kyle, Texas • T: 512.644.7414
Delray Beach, Florida • T: 561.972.8570
Annapolis, Maryland • T: 410.547.3000
www.dynamicec.com

JUSTIN A. GEONNOTTI
PROFESSIONAL ENGINEER
PENNSYLVANIA LICENSE No. 080629

MARK A. WHITAKER
PROFESSIONAL ENGINEER
NEW JERSEY LICENSE No. 41417

TITLE: **VEHICLE CIRCULATION PLAN (WB-50)**

SCALE: (H) 1"=30' (V) | DATE: 11/21/2023
PROJECT No: 1478-99-212

SHEET No: 22 OF 34 | Rev. #: 0

THIS PLAN TO BE UTILIZED FOR VEHICLE CIRCULATION PURPOSES ONLY

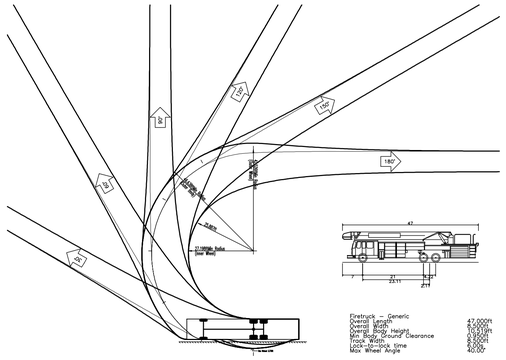

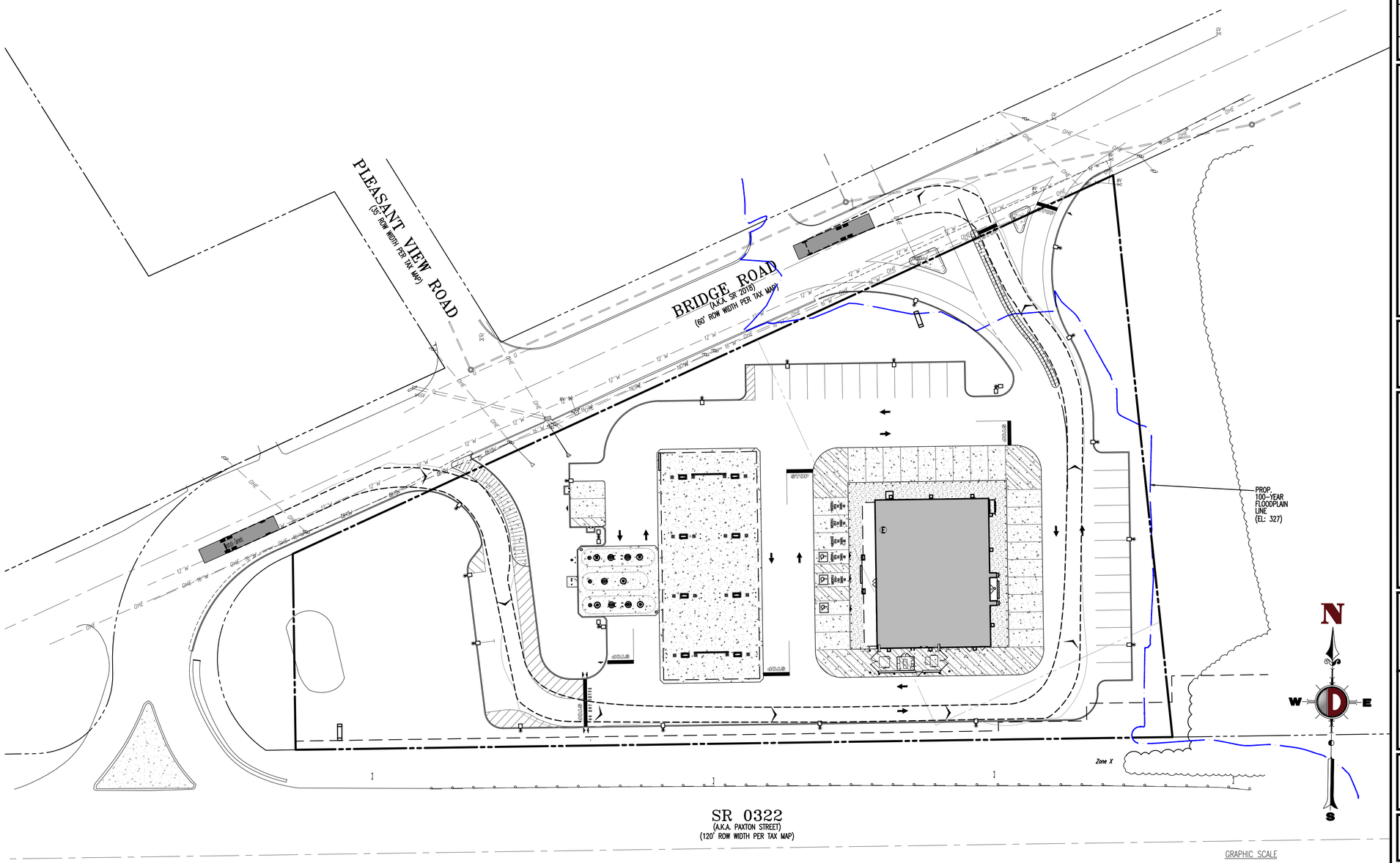

Plotted: 11/22/23 – 12:42 PM, By: nschechter
File: P:\DECPC PROJECTS\1478 Paramount Realty\99-212 Swatara PA\Dwg\Land Dev Plans\D147899212SV0.dwg, ----> 23 VEHICLE CIRCULATION PLAN (FIRE TRUCK)

COPYRIGHT © 2023 – DYNAMIC ENGINEERING CONSULTANTS, PC – ALL RIGHTS RESERVED

DYNAMIC
ENGINEERING CONSULTANTS, PC
SURVEY • TRAFFIC

REV.	DATE	COMMENTS	BY

THIS PLAN SET IS FOR PERMITTING PURPOSES ONLY AND MAY NOT BE USED FOR CONSTRUCTION

DRAWN BY: CMC | DESIGNED BY: MS | CHECKED BY: MAW | CHECKED BY: _

PROJECT: **SWATARA PAXTON DEVELOPERS LLC**
PROPOSED WAWA FOOD MARKET & FUELING STATION
PARCEL NO. 63-022-037
US ROUTE 322 & BRIDGE ROAD (SR 2018)
TOWNSHIP OF SWATARA, DAUPHIN COUNTY, PENNSYLVANIA

811 Know what's below. Call before you dig.
PROTECT YOURSELF
ALL STATES REQUIRE NOTIFICATION OF EXCAVATORS, DESIGNERS, OR ANY PERSON PREPARING TO DISTURB THE EARTH'S SURFACE ANYWHERE IN ANY STATE
FOR STATE SPECIFIC DIRECT PHONE NUMBERS VISIT: WWW.CALL811.COM

DYNAMIC ENGINEERING
LAND DEVELOPMENT CONSULTING • PERMITTING
GEOTECHNICAL • ENVIRONMENTAL
TRAFFIC • SURVEY • PLANNING & ZONING
826 Newtown Yardley Road
Suite 201, Newtown, PA 18940
T: 267.685.0276 | F: 267.685.0361
Offices conveniently located at:
Lakehurst, New Jersey • T: 732.714.0178
Clinton, New Jersey • T: 908.879.9229
Wallkill, New Jersey • T: 914.374.2000
Newark, New Jersey • T: 973.733.7200
Toms River, New Jersey • T: 732.914.0178
Newtown, Pennsylvania • T: 267.685.0276
Philadelphia, Pennsylvania • T: 215.233.4888
Bethlehem, Pennsylvania • T: 610.395.4400
Allen, Texas • T: 972.534.7700
Houston, Texas • T: 281.789.6400
Kyle, Texas • T: 512.644.7414
Delray Beach, Florida • T: 561.972.8570
Annapolis, Maryland • T: 410.547.3000
www.dynamicec.com

JUSTIN A. GEONNOTTI
PROFESSIONAL ENGINEER
PENNSYLVANIA LICENSE No. 080629

MARK A. WHITAKER
PROFESSIONAL ENGINEER
NEW JERSEY LICENSE No. 41417

TITLE: **VEHICLE CIRCULATION PLAN (FIRE TRUCK)**

SCALE: (H) 1"=30' (V) | DATE: 11/21/2023
PROJECT No: 1478-99-212

SHEET No: 23 OF 34 | Rev. #: 0

THIS PLAN TO BE UTILIZED FOR VEHICLE CIRCULATION PURPOSES ONLY

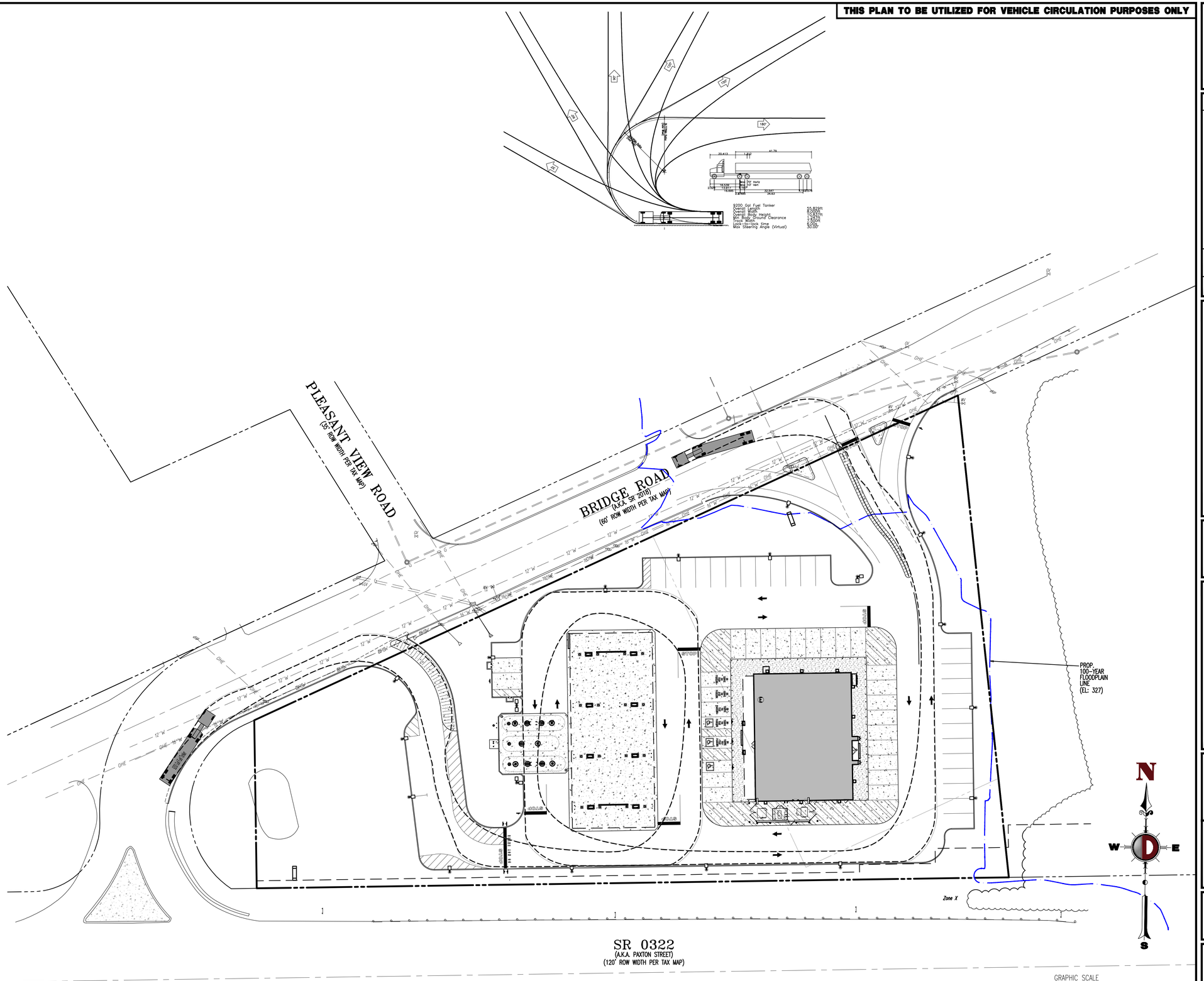

Plotted: 11/22/23 – 12:42 PM, By: nschechter
File: P:\DECPC PROJECTS\1478 Paramount Realty\99-212 Swatara PA\Dwg\Land Dev Plans\D147899212SV0.dwg, ---> 24 VEHICLE CIRCULATION PLAN (TANKER)

COPYRIGHT © 2023 – DYNAMIC ENGINEERING CONSULTANTS, PC – ALL RIGHTS RESERVED

DYNAMIC
ENGINEERING CONSULTANTS
SURVEY • TRAFFIC

REV.	DATE	COMMENTS	BY

THIS PLAN SET IS FOR PERMITTING PURPOSES ONLY AND MAY NOT BE USED FOR CONSTRUCTION

DRAWN BY: CMC | DESIGNED BY: MS | CHECKED BY: MAW | CHECKED BY: _

PROJECT: **SWATARA PAXTON DEVELOPERS LLC**
PROPOSED WAWA FOOD MARKET & FUELING STATION
PARCEL NO. 63-022-037
US ROUTE 322 & BRIDGE ROAD (SR 2018)
TOWNSHIP OF SWATARA, DAUPHIN COUNTY, PENNSYLVANIA

811 Know what's below. Call before you dig.
PROTECT YOURSELF
ALL STATES REQUIRE NOTIFICATION OF EXCAVATORS, DESIGNERS, OR ANY PERSON PREPARING TO DISTURB THE EARTH'S SURFACE ANYWHERE IN ANY STATE
FOR STATE SPECIFIC DIRECT PHONE NUMBERS VISIT: WWW.CALL811.COM

DYNAMIC ENGINEERING
LAND DEVELOPMENT CONSULTING • PERMITTING
GEOTECHNICAL • ENVIRONMENTAL
TRAFFIC • SURVEY • PLANNING & ZONING
826 Newtown Yardley Road
Suite 201, Newtown, PA 18940
T: 267.685.0276 | F: 267.685.0361
Offices conveniently located at:
Lakehurst, New Jersey • T: 732.914.0178
Clinton, New Jersey • T: 908.879.9229
Wall-Ho, New Jersey • T: 856.334.2000
Newark, New Jersey • T: 973.733.7200
Toms River, New Jersey • T: 732.914.0178
Newtown, Pennsylvania • T: 267.685.0276
Philadelphia, Pennsylvania • T: 215.233.4888
Bethlehem, Pennsylvania • T: 610.395.4400
Allen, Texas • T: 972.534.7700
Houston, Texas • T: 281.789.6400
Kyle, Texas • T: 512.644.7414
Delray Beach, Florida • T: 561.972.8570
Annapolis, Maryland • T: 410.547.3000
www.dynamicec.com

JUSTIN A. GEONNOTTI
PROFESSIONAL ENGINEER
PENNSYLVANIA LICENSE No. 080629

MARK A. WHITAKER
PROFESSIONAL ENGINEER
NEW JERSEY LICENSE No. 41417

TITLE: **VEHICLE CIRCULATION PLAN (TANKER)**

SCALE: (H) 1"=30' (V) | DATE: 11/21/2023
PROJECT No: 1478-99-212

SHEET No: **24** OF 34 | Rev. #: 0

SEE SHEET 27-29 OF 34 FOR PCSM PLAN NOTES & DETAILS

LIMIT OF DISTUBANCE & PROJECT SITE BOUNDARY = 125,188 SF (2.87 AC)

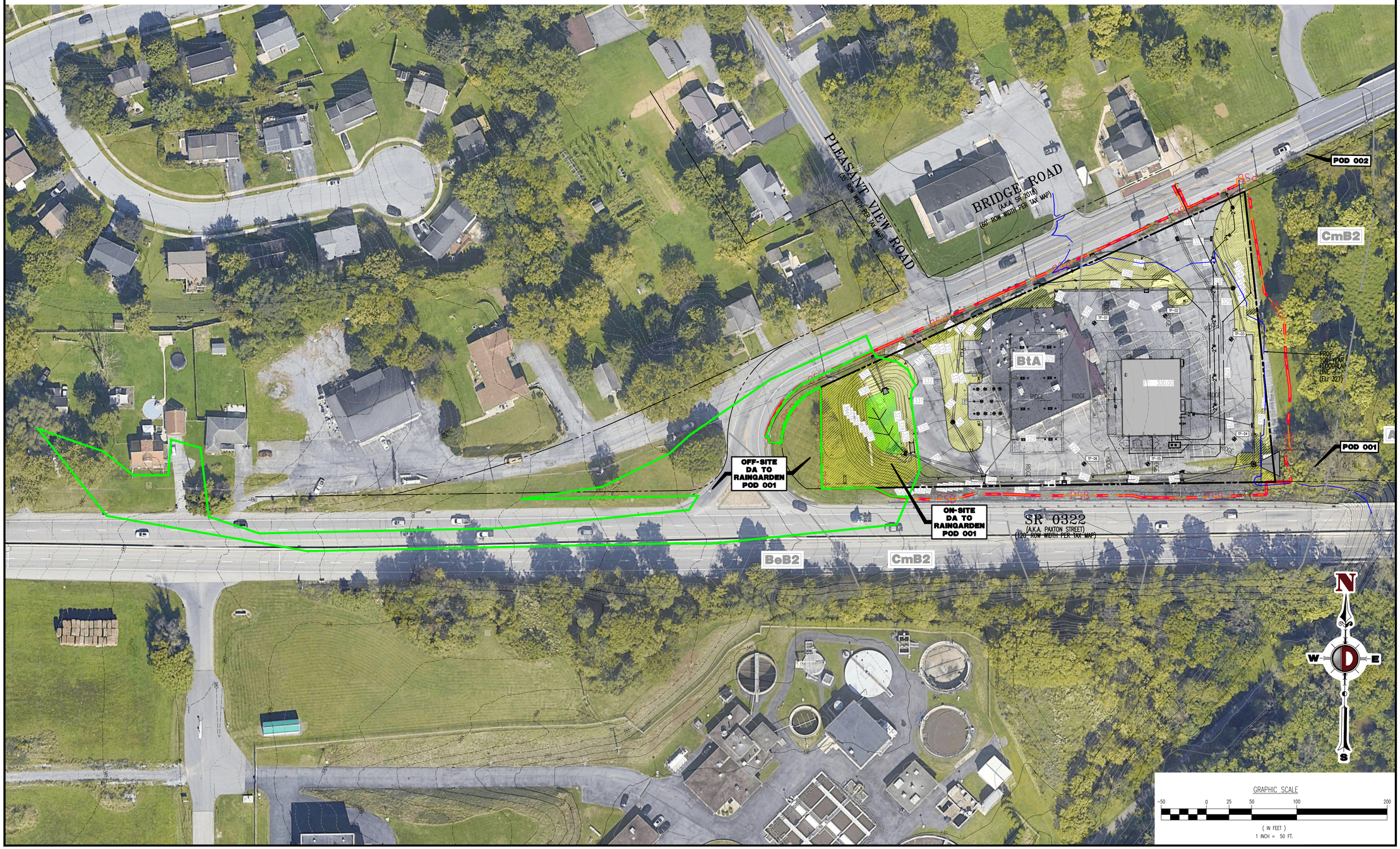

Plotted: 11/22/23 – 12:42 PM, By: nachester
File: P:\DEC\PC PROJECTS\1478 Paramount Realty\99-212 Swatara PA\Dwg\Land Dev Plans\01478999212PCO.dwg, ----> 25 OVERALL PCSM PLAN

COPYRIGHT © 2023 – DYNAMIC ENGINEERING CONSULTANTS, PC – ALL RIGHTS RESERVED

DYNAMIC
• ENGINEERING • EARTH
• SURVEY • TRAFFIC

REV.	DATE	COMMENTS	BY

POST CONSTRUCTION STORMWATER MANAGEMENT PLANS

DRAWN BY: NJS | DESIGNED BY: MS | CHECKED BY: MAW | CHECKED BY: –

PROJECT: **SWATARA PAXTON DEVELOPERS LLC**
PROPOSED WAWA FOOD MARKET & FUELING STATION
PARCEL NO. 63-022-037
US ROUTE 322 & BRIDGE ROAD (SR 2018)
TOWNSHIP OF SWATARA, DAUPHIN COUNTY, PENNSYLVANIA

811 Know what's below. Call before you dig.
PROTECT YOURSELF
ALL STATES REQUIRE NOTIFICATION OF EXCAVATORS, DESIGNERS, OR ANY PERSON PREPARING TO DISTURB THE EARTH'S SURFACE ANYWHERE IN ANY STATE
FOR STATE SPECIFIC DIRECT PHONE NUMBERS VISIT: WWW.CALL811.COM

DYNAMIC ENGINEERING
LAND DEVELOPMENT CONSULTING • PERMITTING
GEOTECHNICAL • ENVIRONMENTAL
TRAFFIC • SURVEY • PLANNING & ZONING
826 Newtown Yardley Road
Suite 201, Newtown, PA 18940
T: 267.685.0276 | F: 267.685.0361
Offices conveniently located at:
Lake Ronkonkoma, New Jersey • T: 732.974.0198
Chatham, New Jersey • T: 908.879.9229
Midtown, New Jersey • T: 856.334.2000
Newark, New Jersey • T: 973.735.7300
Toms River, New Jersey • T: 732.974.0198
Newtown, Pennsylvania • T: 267.685.0276
Philadelphia, Pennsylvania • T: 215.203.4888
Bethlehem, Pennsylvania • T: 610.996.4400
Allen, Texas • T: 972.534.3100
Houston, Texas • T: 281.799.4400
Austin, Texas • T: 512.646.7954
Delray Beach, Florida • T: 561.972.8200
Annapolis, Maryland • T: 410.567.3000
www.dynamicec.com

JUSTIN A. GEONNOTTI
PROFESSIONAL ENGINEER
PENNSYLVANIA LICENSE No. 080629

MARK A. WHITAKER
PROFESSIONAL ENGINEER
NEW JERSEY LICENSE No. 41417

TITLE: **OVERALL PCSM PLAN**

SCALE: (H) 1"=50' (V) | DATE: 11/21/2023
PROJECT No: 1478-99-212

SHEET No: **25** OF 34 | Rev. #: 0

SEE SHEET 27-29 OF 34 FOR PCSM PLAN NOTES & DETAILS

LIMIT OF DISTUBANCE & PROJECT SITE BOUNDARY = 125,188 SF (2.87 AC)

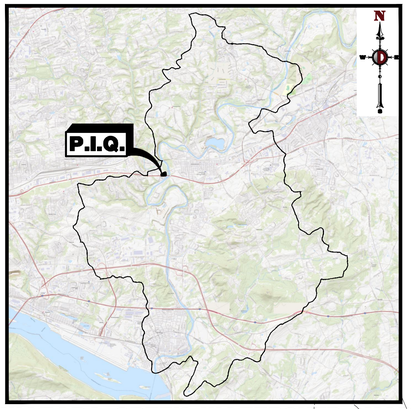

SWATARA CREEK WATERSHED MAP
1" = 10,000'

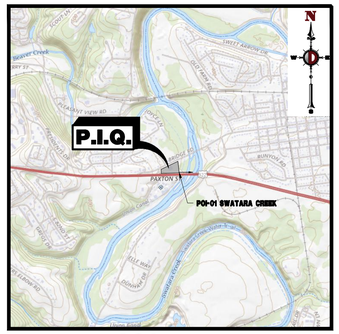

USGS MAP
1" = 2000'

PCSM LEGEND

- EXISTING TITLE LINE (PARCEL IN QUESTION)
- EXISTING R.O.W LINE (PARCEL IN QUESTION)
- PROPERTY LINE (PARCEL IN QUESTION)
- ULTIMATE RIGHT OF WAY LINE
- OFF-SITE PROPERTY LINES
- PROPOSED LIMIT OF DISTURBANCE LINE
- PSB — PROP. LIMIT OF PROJECT SITE BOUNDARY LINE (NPDES)
- EXIST. SOIL BOUNDARY
- DRAINAGE AREA LINES
- RE-VEGETATE DISTURBED AREAS (BMP 5.6.3)
- RAIN GARDEN (BMP 6.4.5)
- PROP. 100-YEAR FLOODPLAIN LINE
- EXIST. MINOR CONTOUR & ELEVATION
- EXIST. MAJOR CONTOUR & ELEVATION
- 330 — PROP. FINISH GRADE CONTOUR & ELEVATION
- BeB2 — SOIL IDENTITY
- PROP. TREE LINES
- PROP. TREES
- PROP. RIP-RAP APRON
- EXIST. TREE LINES
- EXIST. TREES
- EXIST. MONITORING WELL
- APPROX. STORMWATER TEST PIT LOCATION
- APPROX. BORING LOCATION

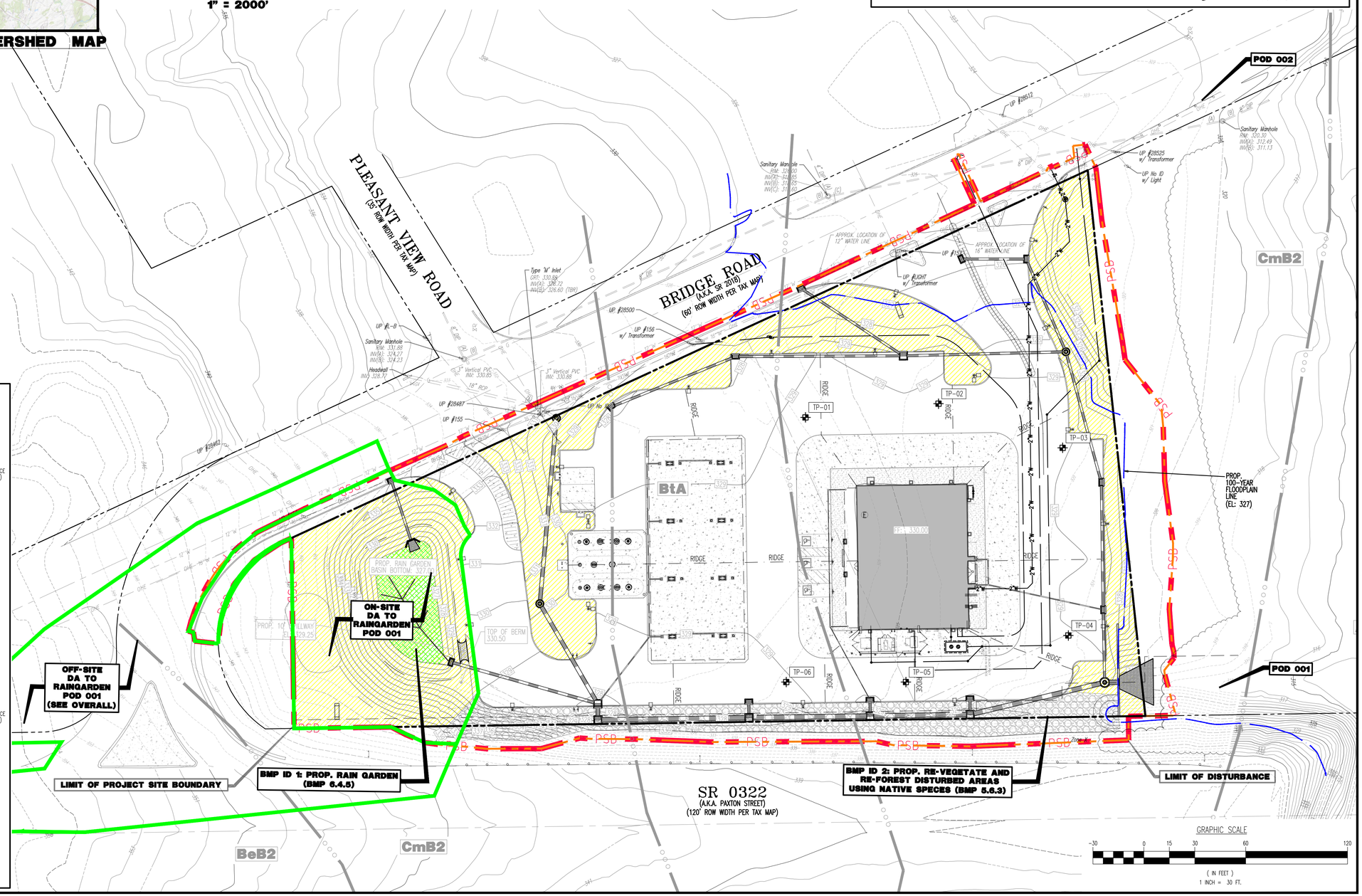

UTILITY GRAPHIC LEGEND

- EXIST. CABLE LINE
- EXIST. ELECTRIC LINE
- EXIST. FIBER OPTIC LINE
- EXIST. GAS LINE
- EXIST. OVERHEAD WIRES
- EXIST. TELEPHONE LINE
- EXIST. UNDERGROUND ELEC./TELE. SERVICE (NO. & SIZE OF CONDUITS NOT DEFINED)
- EXIST. WATER LINE
- EXIST. SANITARY SEWER LINE
- EXIST. STORM DRAIN LINE
- EXIST. UTILITY POLE
- EXIST. GUY WIRE
- EXIST. LIGHT POLE
- EXIST. BUILDING LIGHT
- EXIST. SHOE BOX LIGHT
- EXIST. COBRA LIGHT POLE
- EXIST. TRAFFIC SIGNAL POLE
- EXIST. MANHOLE
- EXIST. 'M' INLET
- EXIST. 'C' INLET
- EXIST. DOUBLE 'M' INLET
- EXIST. YARD INLET
- EXIST. FLARED END SECTION
- EXIST. HEADWALL
- PROP. CABLE LINE
- PROP. ELECTRIC LINE
- PROP. FIBER OPTIC LINE
- PROP. GAS LINE
- PROP. OVERHEAD WIRES
- PROP. TELEPHONE LINE
- PROP. UNDERGROUND ELEC./TELE. SERVICE (NO. & SIZE OF CONDUITS NOT DEFINED)
- PROP. WATER LINE
- PROP. SANITARY SEWER LINE
- PROP. STORM DRAIN LINE
- PROP. UTILITY POLE
- PROP. AREA LIGHT
- PROP. DRAINAGE MANHOLE
- PROP. 'M' INLET
- PROP. 'C' INLET
- PROP. DOUBLE 'M' INLET
- PROP. YARD INLET
- PROP. FLARED END SECTION
- PROP. HEADWALL
- PROP. OUTLET CONTROL STRUCTURE
- PROP. SANITARY SEWER MANHOLE

Plotted: 11/22/23 – 12:42 PM, By: nschechter
File: P:\DEDPC PROJECTS\1478 Paxmount Realty\99-212 Swatara PA\Dwg\Land Dev Plans\D1478999212PCO.dwg, ---> 26 PCSM PLAN

COPYRIGHT © 2023 – DYNAMIC ENGINEERING CONSULTANTS, PC – ALL RIGHTS RESERVED

DYNAMIC ENGINEERING CONSULTANTS, PC
• ENVIRONMENTAL • LAND DEVELOPMENT • SURVEY • TRAFFIC

REV.	DATE	COMMENTS	BY

POST CONSTRUCTION STORMWATER MANAGEMENT PLANS

DRAWN BY: LZ | DESIGNED BY: MS | CHECKED BY: MAW | CHECKED BY: –

PROJECT: SWATARA PAXTON DEVELOPERS, LLC
PROPOSED WAWA FOOD MARKET & FUELING STATION
PARCEL NO. 63-022-037
US ROUTE 322 & BRIDGE ROAD (SR 2018)
TOWNSHIP OF SWATARA, DAUPHIN COUNTY, PENNSYLVANIA

811 Know what's below. Call before you dig.
PROTECT YOURSELF
ALL STATES REQUIRE NOTIFICATION OF EXCAVATORS, DESIGNERS, OR ANY PERSON PREPARING TO DISTURB THE EARTH'S SURFACE ANYWHERE IN ANY STATE
FOR STATE SPECIFIC DIRECT PHONE NUMBERS VISIT: WWW.CALL811.COM

DYNAMIC ENGINEERING
LAND DEVELOPMENT CONSULTING • PERMITTING
GEOTECHNICAL • ENVIRONMENTAL
TRAFFIC • SURVEY • PLANNING & ZONING
826 Newtown Yardley Road
Suite 201, Newtown, PA 18940
T: 267.685.0276 | F: 267.685.0361
Offices conveniently located at:
Lake Carmel, New Jersey • T: 732.772.6178
Chester, New Jersey • T: 908.879.9229
Mahwah, New Jersey • T: 856.374.2000
Neward, New Jersey • T: 973.733.7200
Toms River, New Jersey • T: 732.974.0198
Newtown, Pennsylvania • T: 267.685.0276
Philadelphia, Pennsylvania • T: 215.320.4888
Bethlehem, Pennsylvania • T: 610.398.4400
Allen, Texas • T: 972.534.2100
Houston, Texas • T: 281.789.6400
Austin, Texas • T: 512.644.7544
Delray Beach, Florida • T: 561.921.8370
Annapolis, Maryland • T: 410.647.3000
www.dynamicec.com

JUSTIN A. GEONNOTTI
PROFESSIONAL ENGINEER
PENNSYLVANIA LICENSE No. PE-086029

MARK A. WHITAKER
PROFESSIONAL ENGINEER
NEW JERSEY LICENSE No. 41417

TITLE: PCSM PLAN

SCALE: (H) 1"=30' (V) | DATE: 11/21/2023
PROJECT No: 1478-99-212

SHEET No: 26 OF 34 | Rev. #: 0

SEASONAL HIGH GROUNDWATER AND INFILTRATION TEST SUMMARY TABLE:

Table 1. Summary of Stormwater Borings and Infiltration Testing Results

Proposed Wawa Food Market & Gas Station, Paxton St. (US Route 322) & Bridge Rd., Swatara Twp., Dauphin Co., PA

Loc.	Exist. Surface El. (ft)*	Depth/El. of Mottles (ft) (Limiting Zone)	Depth/El. of GW after Drilling (ft)	Depth/El. of Infiltration Test (ft)	Description of Tested Soil Stratum	Field Meas. Perc. Rate (in./hr.)	Adjusted Rate (in./hr.)**	Rate with Safety Factor of 2	Remarks
PT-1	326.80	5.3/ 321.5	5.9/ 320.9	3.0/ 323.8	Dk. yell. brn.to v. dk. grayish brn., lean clay w/sand (CL), tr. gvl. and organics, very moist. (POSSIBLY ALLUVIAL)	0.00	0.00	0.00	Perched GW or saturation zone at 5.0' to 5.3'; mottles at El. 321.5'
PT-2	323.50	1.5/ 322.0	3.6/ 319.9	1.4/ 322.1	Light yellowish brown with reddish yellow and light gray mottles, lean clay w/sand (CL), trace gravel, moist. (ALLUVIAL)	0.00	0.00	0.00	GW encountered in weathered shale at 10.0' while drilling; GW level rose to 3.6' after drilling; mottles at El. 322.0'
PT-3	322.20	2.0/ 320.2	2.9/ 319.3	1.2/ 321.0	Olive brown with gray and yellowish brown mottles, lean clay w/sand (CL), tr. gravel and organics, v. moist to wet. (ALLUVIAL)	0.00	0.00	0.00	Perched GW encountered at 3.0' while drilling; GW level rose to 2.9' after drilling; mottles at El. 320.2'
PT-4	321.30	0.5/ 320.8	4.9/ 316.4	1.0/ 320.3	Brown with pinkish gray, dark brown, and strong brown mottles, lean clay with sand and gravel (CL), moist to very moist.	0.00	0.00	0.00	GW level at 4.9' after drilling; mottles at El. 320.8'
PT-5	324.00	3.6/ 320.4	5.3/ 318.7	1.6/ 322.4	Light olive brown, lean clay with gravel (CL), moist to very moist.	0.00	0.00	0.00	GW level at 5.3' after drilling; mottles at El. 320.4'
PT-6	326.80	4.8/ 322.0	4.6/ 322.2	2.8/ 324.0	Non-homogenous mix of crushed concrete with brown lean clay (CL), trace gravel, damp to moist. (FILL)	0.00	0.00	0.00	FILL to 4.8'; GW level at 4.6' after drilling (El. 322.2').

*Existing surface elevations were provided by Dynamic Engineering on a plan mark-up entitled "Test Pit Exhibit".

NRCS SOIL TABLE:

DAUPHIN COUNTY SOIL SURVEY INFORMATION		
SOIL TYPE (SYMBOL)	SOIL TYPE (NAME)	HYDROLOGIC SOIL GROUP (HSG)
CmB2	CAPTINA SILT LOAM	D
BtA	BRINKERTON AND ARMAGH	D

USE LIMITATIONS FOR SOIL AND GEOLOGIC FORMATIONS §102.8(f)(2):

SOIL NAME	CUTBANKS CAVE	CORROSIVE TO CONCRETE/STEEL	DROUGHTY	EASILY ERODIBLE	FLOODING	DEPTH TO SATURATED ZONE/SEASONAL HIGH WATER TABLE	HYDRIC/HYDRIC INCLUSIONS	LOW STRENGTH/ LANDSLIDE PRONE	SLOW PERCOLATION	PIPING	POOR SOURCE OF TOPSOIL	FROST ACTION	SHRINK/SWELL	POTENTIAL SINKHOLE	PONDING	WETNESS
ARMAGH	X	C/S				X	X	X	X	X	X	X	X			X
BRINKERTON	X	C/S	X	X		X	X	X	X	X	X	X	X			X

CUTBANKS CAVE: CONTRACTOR SHALL USE CONSTRUCTION TECHNIQUES DESIGNED TO REDUCE OR ELIMINATE THE POTENTIAL FOR CUTBANK CAVING.

CORROSIVE: SUITABLE PRECAUTIONS SHOULD BE TAKEN TO PROTECT ALL UNDERGROUND PIPES, CONDUITS AND STORAGE TANKS.

EASILY ERODIBLE: EROSION CONTROL MEASURES SHOULD BE UTILIZED AND MONITORED UNTIL SITE STABILIZATION.

FLOODING: CONTRACTOR SHALL PROVIDE POSITIVE DRAINAGE AT ALL AREAS.

DEPTH OF SATURATED ZONE: CONTRACTOR SHALL UTILIZE CONSTRUCTION TECHNIQUES DESIGNED TO HANDLE ANY WATER ENCOUNTERED DURING EXCAVATION.

HYDRIC INCLUSIONS: CONTRACTOR SHALL UTILIZE CONSTRUCTION TECHNIQUES DESIGNED TO HANDLE ANY SATURATED SOILS DURING EXCAVATION.

LOW STRENGTH: PRECAUTIONS SHOULD BE TAKEN TO PREVENT SLOPE FAILURE DUE TO IMPROPER CONSTRUCTION TECHNIQUES SUCH AS OVER-STEEPENING AND OVERLOADING OF SLOPES, REMOVAL OF LATERAL SUPPORT AND FAILURE TO PREVENT SATURATION OF SLOPES.

SLOW PERCOLATION: INFILTRATION TESTING PERFORMED ON-SITE YIELDED FAVORABLE PERCOLATION RATES.

PIPING: PRECAUTIONS SHOULD BE TAKEN, AS NECESSARY, TO PREVENT PIPING.

POOR SOURCE OF TOPSOIL: SOIL TESTS MAY BE PERFORMED TO DETERMINE APPROPRIATE TOPSOIL.

FROST ACTION: PRECAUTIONS ARE NEEDED TO PREVENT DAMAGE, ESPECIALLY TO ROADWAYS.

SHRINK/SWELL: STRENGTHENED FOUNDATIONS MAY BE UTILIZED IF WARRANTED BY ACTUAL SITE INVESTIGATIONS.

POTENTIAL SINKHOLES: A SINKHOLE TREATMENT DETAIL IS PROVIDED ON THE PLAN. CONTRACTOR SHALL NOTIFY ENGINEER, TOWNSHIP AND CONSERVATION DISTRICT IMMEDIATELY IF SINKHOLES ARE ENCOUNTERED.

PONDING: CONTRACTOR SHALL PROVIDE POSITIVE DRAINAGE AT ALL AREAS, REDUCING THE POTENTIAL FOR PONDING WATER AND WETNESS.

WETNESS: CONTRACTOR SHALL PROVIDE POSITIVE DRAINAGE AT ALL AREAS, REDUCING THE POTENTIAL FOR PONDING WATER AND WETNESS.

CRITICAL STAGES OF PCSM PLAN IMPLEMENTATION:

THE CRITICAL STAGES OF PCSM PLAN IMPLEMENTATION ARE THE FOLLOWING:

- THE INSTALLATION OF THE RAINGARDEN, AND ALL ASSOCIATED COMPONENTS (AND ALL OTHER TIMES DEEMED APPROPRIATE BY PADEP OR COUNTY CONSERVATION DISTRICT).

ALL LISTED BMPS SHALL BE CONSTRUCTED WITH OVERSIGHT BY A LICENSED PROFESSIONAL OR THEIR DESIGNEE.

NPDES GENERAL PERMITTING NOTES:

§102.7. PERMIT TERMINATION.
A. UPON PERMANENT STABILIZATION OF THE EARTH DISTURBANCE ACTIVITY UNDER §102.22(A)(2) (RELATING TO PERMANENT STABILIZATION), AND INSTALLATION OF BMPS IN ACCORDANCE WITH AN APPROVED PLAN PREPARED AND IMPLEMENTED IN ACCORDANCE WITH §102.4 AND §102.8 (RELATING TO EROSION AND SEDIMENT CONTROL REQUIREMENTS; AND PCSM REQUIREMENTS), THE PERMITTEE OR CO-PERMITTEE SHALL SUBMIT A NOTICE OF TERMINATION TO THE DEPARTMENT OR CONSERVATION DISTRICT.
B. THE NOTICE OF TERMINATION MUST INCLUDE:
a. THE FACILITY NAME, ADDRESS AND LOCATION
b. THE OPERATOR NAME AND ADDRESS
c. THE PERMIT NUMBER
d. THE REASON FOR PERMIT TERMINATION
e. IDENTIFICATION OF THE PERSONS WHO HAVE AGREED TO AND WILL BE RESPONSIBLE FOR LONG-TERM OPERATION AND MAINTENANCE TO THE PCSM BMPS IN ACCORDANCE WITH §102.8(M) AND PROOF OF COMPLIANCE WITH §102.8(M)(2).
C. UNTIL THE PERMITTEE OR CO-PERMITTEE HAS RECEIVED WRITTEN APPROVAL OF A NOTICE OF TERMINATION, THE PERMITTEE OR CO-PERMITTEE WILL REMAIN RESPONSIBLE FOR COMPLIANCE WITH THE PERMIT TERMS AND CONDITIONS INCLUDING LONG-TERM OPERATION AND MAINTENANCE OF ALL PCSM BMPS ON THE PROJECT SITE AND IS RESPONSIBLE FOR VIOLATIONS OCCURRING ON THE PROJECT SITE. THE DEPARTMENT OR CONSERVATION DISTRICT WILL CONDUCT A FINAL INSPECTION AND APPROVE OR DENY THE NOTICE OF TERMINATION WITHIN 30 DAYS.

§102.8 PCSM REQUIREMENTS.
A. PCSM REPORTING AND RECORDKEEPING, THE PCSM PLAN, INSPECTION REPORTS AND MONITORING RECORDS SHALL BE AVAILABLE FOR REVIEW AND INSPECTION BY THE DEPARTMENT OR THE CONSERVATION DISTRICT.
B. LICENSED PROFESSIONAL OVERSIGHT OF CRITICAL STAGES. A LICENSED PROFESSIONAL OR A DESIGNEE SHALL BE PRESENT ONSITE AND BE RESPONSIBLE DURING CRITICAL STAGES OF IMPLEMENTATION OF THE APPROVED PCSM PLAN. THE CRITICAL STAGES MAY INCLUDE THE INSTALLATION OF UNDERGROUND TREATMENT OR STORAGE BMPS, STRUCTURALLY ENGINEERED BMPS, OR OTHER BMPS AS DEEMED APPROPRIATE BY THE DEPARTMENT OR THE CONSERVATION DISTRICT.
a. SURFACE FACILITIES THAT CAN BE VISUALLY INSPECTED AFTER INSTALLATION WILL BE VISUALLY INSPECTED AND CERTIFIED UPON COMPLETION.

C. FINAL CERTIFICATION. THE PERMITTEE SHALL INCLUDE WITH THE NOTICE OF TERMINATION "RECORD DRAWINGS" WITH A FINAL CERTIFICATION STATEMENT FROM A LICENSED PROFESSIONAL, WHICH READS AS FOLLOWS:

"I (NAME) DO HEREBY CERTIFY PURSUANT TO THE PENALTIES OF 18 PA.C.S.A. §4904 TO THE BEST OF MY KNOWLEDGE, INFORMATION AND BELIEF, THAT THE ACCOMPANYING RECORD DRAWINGS ACCURATELY REFLECT THE AS-BUILT CONDITIONS, ARE TRUE AND CORRECT, AND ARE IN CONFORMANCE WITH CHAPTER 102 OF THE RULES AND REGULATIONS OF THE DEPARTMENT OF ENVIRONMENTAL PROTECTION AND THAT THE PROJECT SITE WAS CONSTRUCTED IN ACCORDANCE WITH THE APPROVED PCSM PLAN, ALL APPROVED PLAN CHANGES AND ACCEPTED CONSTRUCTION PRACTICES."

1. THE PERMITTEE SHALL RETAIN A COPY OF THE RECORD DRAWINGS AS A PART OF THE APPROVED PCSM PLAN.
2. THE PERMITTEE SHALL PROVIDE A COPY OF THE RECORD DRAWINGS AS A PART OF THE APPROVED PCSM PLAN TO THE PERSON IDENTIFIED IN THIS SECTION AS BEING RESPONSIBLE FOR THE LONG-TERM OPERATION AND MAINTENANCE OF THE PCSM BMPS.

CERTIFICATIONS SHALL BE FILED WITH THE DEPARTMENT OR AUTHORIZED CONSERVATION DISTRICT WITHIN 30 DAYS AFTER THE COMPLETION OF EARTH DISTURBANCE ACTIVITIES AUTHORIZED BY THE PERMIT. COMPLETION OF EARTH DISTURBANCE ACTIVITIES INCLUDES THE PERMANENT STABILIZATION AND PROPER INSTALLATION OF" PCSM BMPS IN ACCORDANCE WITH THE APPROVED PCSM PLAN, OR UPON SUBMISSION OF THE NOT IF SOONER.

GEOLOGICAL FORMATIONS AND SOIL CONDITIONS §102.8(f)(12):

NO POLLUTION ORIGINATING FROM THE DEVELOPMENT IS ANTICIPATED DURING THE CONSTRUCTION PROCESS. IF ANY ISSUE ARISE DURING EARTH MOVING ACTIVITIES, LAND CLEARING ACTIVITIES, OR ANY ASSOCIATED ACTIVITIES WITH DEVELOPING THE SITE, ALL WORK SHALL IMMEDIATELY CEASE AND THE DAUPHIN COUNTY CONSERVATION DISTRICT (DCCD) SHALL BE NOTIFIED.

LONG TERM OPERATION, MAINTENANCE AND INSPECTION SCHEDULE §102.8(f)(10):

GENERAL
1. PCSM LONG TERM OPERATION, MAINTENANCE AND INSPECTION SHALL BE AT THE RESPONSIBILITY OF SWATARA PAXTON DEVELOPERS, LLC OR THEIR SUCCESSORS.
2. STORM DRAINAGE SYSTEMS – THE STORMWATER MANAGEMENT FACILITIES INCLUDING THE INLETS AND STORMWATER PIPING ON THIS SITE SHALL BE MAINTAINED IN PROPER WORKING ORDER IN ACCORDANCE WITH THESE PLANS AND PER THE RECOMMENDATION OF THE STRUCTURE(S) MANUFACTURES(S). MAINTENANCE OF THESE STORMWATER MANAGEMENT FACILITIES, AS NOTED BELOW, SHALL BE THE RESPONSIBILITY OF THE PROPERTY OWNER(S) UPON WHOSE PROPERTY FACILITIES ARE LOCATED.
3. ALL ONSITE INLETS, MANHOLES AND STORMWATER PIPING SHALL BE CLEARED OF DEBRIS EVERY (3) MONTHS OR WHEN ACCUMULATION HINDERS OPERATION OF THE FACILITY.
4. ALL SEDIMENT/DEBRIS/OIL REMOVED FROM THE STORMWATER MANAGEMENT SYSTEM SHALL BE DISPOSED PER LOCAL, STATE AND FEDERAL STANDARDS.
5. SHOULD ONSITE EROSION OCCUR FROM THE LANDSCAPED AREAS, SOURCE OF EROSION SHALL BE IMMEDIATELY STABILIZED AND THE INLETS, MANHOLES, AND STORMWATER PIPING SHALL BE CHECKED FOR ACCUMULATION AND CLEARED IF ACCUMULATION OF SEDIMENT EXISTS
6. DURING FLUSHING/MAINTENANCE OF INLETS AND STORMWATER PIPING, SEDIMENT LADEN WATER TO BE CAPTURED WITH USE OF PIPE PLUG OR APPROVED EQUAL AND SIMULTANEOUSLY PUMPED OUT WITH USE OF PUMP WITH SEDIMENT BAG.

OBSTRUCTIONS AND DEBRIS
ALL STORMWATER MANAGEMENT FACILITIES SHALL BE CLEARED OF ALL DEBRIS AND LITTER ON A QUARTERLY BASIS AND AFTER ALL MAJOR STORM EVENTS (GREATER THAN 1" RAINFALL DEPTH). ADDITIONALLY, FLOATING DEBRIS SHALL BE REMOVED AND THE FACILITY SHALL BE INSPECTED FOR VISIBLE POLLUTION OR SHORELINE PROBLEMS. ERODED CHANNELS OR AREAS OF EXCESSIVE EROSION NEAR THE FACILITY SHALL BE BACKFILLED AND STABILIZED IMMEDIATELY.

SEDIMENT ACCUMULATION
MONITOR SEDIMENT ACCUMULATIONS IN ALL STORMWATER MANAGEMENT AND WATER QUALITY FACILITIES. BIORETENTION AND MANAGED RELEASE BASINS SHOULD BE INSPECTED AFTER ALL RUNOFF EVENTS TO ENSURE THAT RUNOFF DRAINS DOWN WITHIN 72 HOURS. IF STORAGE VOLUMES HAVE BEEN REDUCED SIGNIFICANTLY OR THE POOLS BECOME STAGNANT. ACCUMULATED SEDIMENT SHALL BE REMOVED FROM THE STORMWATER MANAGEMENT AND WATER QUALITY FACILITIES AS REQUIRED (OR ONCE PER YEAR) AND SHALL EITHER BE REMOVED FROM THE SITE OR DISPOSED OF ON-SITE AT AN APPROVED DISPOSAL AREA. MAINTENANCE OF CATCH BASINS AND INLETS SHALL BE COMPLETED WITH A VACUUM TRUCK. ALL COLLECTED WASTE MUST BE HANDLED AND DISPOSED OF ACCORDING TO LOCAL ENVIRONMENTAL REQUIREMENTS. PRIOR TO ON-SITE DISPOSAL OF SEDIMENT, THE OWNER SHALL ACQUIRE THE APPROPRIATE EARTH DISTURBANCE PERMITS FROM THE MUNICIPALITY AND/OR THE CONSERVATION DISTRICT.

VEGETATED AREAS
VEGETATED AREAS SHALL BE MAINTAINED WITH A MINIMUM UNIFORM VEGETATIVE 70% PERENNIAL VEGETATIVE COVER WITH A DENSITY CAPABLE OF RESISTING ACCELERATED EROSION AND SEDIMENTATION. VEGETATED AREAS THAT WASH OUT MUST BE FILLED AND GRADED AS NECESSARY AND AROUND WATER COURSES, IN SWALES, IN AREAS OF CONCENTRATED FLOWS, AND ON STEEP SLOPES.

RESTORATION OF DISTURBED AREA
1. THE SOIL RESTORATION PROCESS MAY NEED TO BE REPEATED OVER TIME, SUE TO COMPACTION BY USE AND/OR SETTLING.
2. THE RESTORATION AREA SHALL BE MOWED ANNUALLY TO CONTROL INVASIVE.
3. APPLICATION OF SELECTED HERBICIDE (ROUNDUP OR SIMILAR GLYPHOSATE HERBICIDE) SHALL BE PLACED AROUND TREE TUBES WITH SELECTED CUTTING AND MANUAL REMOVAL WHEN NECESSARY.
4. ROUTINE MAINTENANCE IS CRITICAL DURING THE FIRST, SECOND, AND THIRD YEARS OF GROWTH.
5. THE MEADOWS SHALL BE MOWED SEASONALLY.
6. DURING THE FIRST YEAR OF MEADOW GROWTH, THE WEEDS SHALL BE CAREFULLY CONTROLLED AND CONSISTENTLY MOWED BACK TO 4-6 INCHES TALL WHEN THEY REACH 12 INCHES IN HEIGHT.
7. DURING THE SECOND YEAR OF MEADOW GROWTH, THE WEEDS SHALL BE MONITORED, MOWED, AND HAND TREATED WITH HERBICIDE.
8. THE MEADOW SHALL BE MOWED CLOSELY TO THE GROUND.
9. BARE AREAS AND DEAD VEGETATION SHALL BE REMOVED AND REPLACED/RESEEDED.

RE-VEGETATE AND RE-FOREST DISTURBED AREAS (BMP 5.6.3)
1. MAINTENANCE IS NECESSARY TO ENSURE PROPER FUNCTIONALITY OF THE VEGETATED AREAS AND SHOULD TAKE PLACE ON A QUARTERLY BASIS.
2. MOWING AND/OR TRIMMING OF VEGETATION SHOULD BE PERFORMED AS NECESSARY TO SUSTAIN THE SYSTEM, BUT ALL DETRITUS SHOULD BE REMOVED FROM THE PLANTING BEDS.
3. VEGETATED AREAS SHOULD BE INSPECTED ANNUALLY FOR EROSION.
4. VEGETATED AREAS SHOULD BE ANNUALLY FOR UNWANTED GROWTH OF EXOTIC/INVASIVE SPECIES.
5. THE MEADOWS SHALL BE MOWED SEASONALLY.
6. DURING THE FIRST YEAR OF MEADOW GROWTH, THE WEEDS SHALL BE CAREFULLY CONTROLLED AND CONSISTENTLY MOWED BACK 4-6 INCHES TALL WHEN THEY REACH 12 INCHES IN HEIGHT.
7. DURING THE SECOND YEAR OF MEADOW GROWTH, THE WEEDS SHALL BE MONITORED, MOWED, AND HAND TREATED WITH HERBICIDE.
8. THE MEADOW SHALL BE MOWED CLOSELY TO THE GROUND.
9. BARE AREAS AND DEAD VEGETATION SHALL BE REMOVED AND REPLACED/RESEEDED.

RAIN GARDEN BASIN (BMP 6.4.5)
1. MAINTENANCE IS NECESSARY TO ENSURE PROPER FUNCTIONALITY OF THE BASIN AND SHOULD TAKE PLACE ON A QUARTERLY BASIS.
2. CATCH BASINS AND INLETS (UPGRADIENT OF THE BASIN) SHOULD BE INSPECTED AND CLEANED AT LEAST FOUR TIMES PER YEAR AND AFTER STORMS GREATER THAN 1-INCH. STRUCTURES INCLUDE BASIN BOTTOMS, TRASH RACKS, OUTLETS STRUCTURES, RIPRAP AND INLETS.
3. SEDIMENT REMOVAL SHOULD BE CONDUCTED WHEN THE BASIN IS COMPLETELY DRY. SEDIMENT SHOULD BE DISPOSED OF PROPERLY AND ONCE SEDIMENT IS REMOVED, DISTURBED AREAS NEED TO BE IMMEDIATELY STABILIZED AND REVEGETATED.
4. MOWING AND/OR TRIMMING OPF VEGETATION SHOULD BE PERFORMED AS NECESSARY TO SUSTAIN THE SYSTEM, BUT ALL DETRITUS SHOULD BE REMOVED FROM THE BASIN.
5. VEGETATED AREAS SHOULD BE INSPECTED ANNUALLY FOR EROSION.
6. VEGETATED AREAS SHOULD BE INSPECTED ANNUALLY FOR UNWANTED GROWTH OF EXOTIC/INVASIVE SPECIES.
7. VEGETATED COVER SHOULD BE MAINTAINED AT A MINIMUM OF 95 PERCENT, IF VEGETATIVE COVER HAS BEEN REDUCED 10% VEGETATION SHOULD BE REESTABLISHED.
8. INSPECT THE BASIN AFTER RUNOFF EVENTS, AND MAKE SURE THAT RUNOFF DRAINS DOWN WITHIN 72 HOURS. MOSQUITOS SHOULD NOT BE A PROBLEM IF THE WATER DRAINS IN 72 HOURS, MOSQUITOS REQUIRE A CONSIDERABLY LONG BREEDING PERIOD WITH RELATIVELY STATIC WATER LEVELS.

OUTLET STRUCTURE
1. DURING LOW WATER CONDITIONS, SPILLWAY STRUCTURES SHALL BE INSPECTED TO DETERMINE IF WATER IS PASSING THROUGH ANY JOINTS OR OTHER STRUCTURE CONTACTS AND TO IDENTIFY ANY CRACKS, SPALLING, BROKEN OR LOOSE SECTIONS. ANY CRACKED, SPALLED BROKEN OR LOOSE SECTIONS SHALL BE CLEANED AND REFILLED WITH THE APPROPRIATE CONCRETE PATCHING MATERIAL. A PROFESSIONAL ENGINEER SHALL BE CONSULTED TO REPAIR EXTENSIVE LEAKAGE, SPALLS, OR FRACTURES.
2. ANY REPAIRS MADE TO THE PRINCIPAL SPILLWAY (RISER OR BARRELL) SHALL BE REVIEWED BY A PROFESSIONAL ENGINEER, VERTICAL TRENCHING TO EXPOSE THE BARREL SHALL NOT BE ALLOWED UNDER ANY CIRCUMSTANCES. THE TRENCH SIDE SLOES SHALL BE STEPPED BACK AT 2:1 SLOPE, MINIMUM.

9. ALSO INSPECT FOR ACCUMULATION OF SEDIMENT, DAMAGE TO OUTLET CONTROL STRUCTURES, EROSION CONTROL MEASURES AND SIGNS OF WATER CONTAMINATION/SPILLS.

SCHEDULE OF INSPECTIONS
1. AN INITIAL INSPECTION SHALL BE PERFORMED BY THE TOWNSHIP ENGINEER TO VERIFY THAT STORMWATER INFILTRATION BMP LOCATIONS ARE MARKED OUT PRIOR TO CONSTRUCTION AND THAT THESE AREAS SHALL BE PROTECTED FROM DISTURBANCE AND COMPACTION.
2. THE TOWNSHIP ENGINEER SHALL INSPECT ALL PHASES OF THE INSTITUTION OF THE PERMANENT STORMWATER MANAGEMENT FACILITIES AS DEEMED APPROPRIATE BY THE TOWNSHIP ENGINEER.
3. DURING ANY STAGE OF THE WORK, IF THE TOWNSHUP ENGINEER DETERMINES THAT THE PERMANENT STORMWATER MANAGEMENT FACILITIES ARE NOT BEING INSTALLED IN ACCORDANCE WITH THE APPROVED STORMWATER MANAGEMENT PLAN, THE TOWNSHIP SHALL REVOKE ANY EXISTING PERMITS OR OTHER APPROVALS AND ISSUE A CEASE-AND-DESIST ORDER UNTIL A REVISED DRAINAGE PLAN IS SUBMITTED AND APPROVED, AS SPECIFIED IN THIS CHAPTER.
4. A FINAL INSPECTION OF ALL STORMWATER MANAGEMENT FACILITIES SHALL BE CONDUCTED BY THE TOWNSHIP ENGINEER OR HIS DESIGNEE TO CONFIRM COMPLIANCE WITH THE APPROVED DRAINAGE PLAN PRIOR TO THE ISSUANCE OF ANY OCCUPANCY PERMIT.

RECORD KEEPING
1. ALL PCSM INSPECTION, MAINTENANCE, AND REPAIRS SHALL BE DOCUMENTED. THE INSPECTION LOG SHALL BE MAINTAINED AT THE SITE BY THE APPLICANT'S SITE MANAGER. LOG SHOULD BE AVAILABLE FOR REVIEW AND INSPECTION AT THE SITE AT ALL TIMES.

PA CHAPTER 93 CLASSIFICATION §102.4(b)(5)(v):

1. THE SUBJECT SITE DRAINS TO SWATARA CREEK, SWATARA CREEK WATERSHED.
2. THE SWATARA IS LOCATED APPROXIMATELY 300 FEET EAST OF THE PROPERTY BOUNDARY. SWATARA IS CLASSIFIED AS A WWF & MF (WARM WATER FISH & MIGRATORY FISH) WATER PER PA CHAPTER 93.
3. THE PROJECT SITE DOES NOT CONTAIN ANY FRESHWATER WETLANDS.

PCSM BMP DESCRIPTIONS §102.8(f)(6):

BMP ID-1: RAIN GARDEN BASIN (BMP 6.4.5) – CRITICAL STAGE

THE RAIN GARDEN HAS BEEN PROPOSED ON-SITE, STORMWATER RUNOFF FROM OFF-SITE DRAINAGE AREAS IS COLLECTED IN THE BASIN AND SLOWLY BYPASSED AND INFILTRATED, DESIGN ELEMENTS INCORPORATED INTO THE RAIN GARDEN BASIN INCLUDE THE FOLLOWING:

1. UNCOMPACTED SUB-GRADE
2. ERNMX-183 RAIN GARDEN SEED MIX
3. PROVIDES POSITIVE STORMWATER OVERFLOW THROUGH ENGINEERED OUTLET STRUCTURE.
4. NOT INSTALLED ON RECENTLY PLACED FILL (<5 YEARS)
5. MAINTAINS A MINIMUM 2-FOOT SEPARATION TO SEASONALLY HIGH WATER TABLE.

BMP ID-2: RE-VEGETATE AND RE-FOREST DISTURBED AREAS (BMP 5.6.3)

RE-VEGETATION OF DISTURBED AREAS HAS BEEN PROPOSED IN AREAS OF THE DISTURBED SOILS PROPOSED TO BE LANDSCAPED AREAS THROUGHOUT THE SITE. SOME OF THE DESIGN CONSIDERATIONS ARE AS FOLLOWS:

- EXISTING HIGH-QUALITY PLANT MATERIALS AND SOIL MANTLE SHALL BE PRESERVED WHEREVER POSSIBLE. COMPACTION WILL BE REDUCED THROUGH THE USE OF PROPER CONSTRUCTION SEQUENCES AND, WHERE SOILS ARE FOUND TO BE OVERLY COMPACTED DURING CONSTRUCTION SOIL AMENDMENTS WILL BE PERFORMED TO HELP RESTORE THE NATURAL INFILTRATION CAPACITY.
- THE PROJECT PROPOSES TO USE NATIVE SPECIES FOR LANDSCAPING AND RE-VEGETATION THAT DO NOT REQUIRE SIGNIFICANT CHEMICAL MAINTENANCE BY FERTILIZERS, HERBICIDES, AND PESTICIDES. THE CONTRACTOR SHALL USE THE WARM SEASON GRASSES SEED MIX SPECIFICATIONS PROVIDED WITHIN THE PERMANENT SEEDING NOTES. THE MIX CONTAINS PERENNIAL WARM SEASON GRASSES (WHICH TAKE 1-2 YEARS TO ESTABLISH) COMBINED WITH COOL SEASON GRAIN TO PROVIDE IMMEDIATE COVER AND AS A COMPANION CROP.THE GRAIN MATURES QUICKLY DURING THE COOL WET SEASON AND GOES DORMANT DURING A HOT DRY PERIOD, WHICH ALLOWS THE NATIVE GRASSES TO DEVELOP INTO LONG-TERM GRASS COVER.

PCSM PLANNING AND DESIGN §102.8(b):

PRESERVE THE INTEGRITY OF STREAM CHANNELS AND MAINTAIN AND PROTECT THE PHYSICAL, BIOLOGICAL AND CHEMICAL QUALITIES OF THE RECEIVING STREAM
THE SUBJECT DOES NOT CONTAIN ANY WETLANDS OR STREAMS. THE PROPOSED DESIGN. THE PROPOSED DRAINAGE DESIGN HAS BEEN PREPARED TO SATISFY THE PERFORMANCE MEASURES SET FORTH BY THE TOWNSHIP ORDINANCES AND THE REQUIREMENTS OF THE NPDES PERMIT FOR DISCHARGES ASSOCIATED WITH CONSTRUCTION ACTIVITY TO MINIMIZE ADVERSE IMPACT OF STORMWATER RUNOFF TO RECEIVING WATER BODIES AND SURROUNDING AREAS.

PREVENT AN INCREASE IN STORMWATER RUNOFF VOLUME
THE RUNOFF RATE AND VOLUME WILL BE REDUCED, AS THE PROPOSED DESIGN IS A REDUCTION IN IMPERVIOUS COVERAGE.
FOR DESIGN STORMS UP TO AND INCLUDING THE POST-DEVELOPMENT 100-YEAR STORM BELOW PRE-DEVELOPMENT CONDITIONS.

MINIMIZE IMPERVIOUS AREAS
THE PROPOSED DESIGN PROVIDES ONLY THE NECESSARY IMPERVIOUS COVERAGE FOR SITE OPERATIONS, WHICH IS A REDUCTION FROM THE PRE-DEVELOPMENT CONDITIONS AND PROVIDES LARGE AREAS OF PERIMETER GREEN SPACE.

MAXIMIZE PROTECTION OF EXISTING DRAINAGE FEATURES AND EXISTING VEGETATION
THE INTENT OF THE DRAINAGE DESIGN IS TO MAINTAIN THE EXISTING PATTERNS AND DISCHARGE POINTS WHILE SATISFYING THE APPLICABLE WATER QUALITY AND RATE CONTROL CRITERIA AS REQUIRED NPDES AND THE TOWNSHIP ORDINANCE.

MINIMIZE LAND CLEARING AND GRADING
THE PROPOSED DESIGN DOES NOT PROPOSE DISTURBANCE TO LARGE AREAS OF TREES OR NATURAL RESOURCES. ADDITIONALLY, THE SITE IS GRADED TO MIMIC EXISTING DRAINAGE PATTERNS.

MINIMIZE SOIL COMPACTION
VEHICLES MOVEMENT, STORAGE, OR EQUIPMENT/MATERIAL LAYDOWN SHALL NOT BE PERMITTED IN CRITICAL AREAS SUCH AS THE BASIN AREA. THE AREA SHALL BE PROTECTED FROM VEHICULAR ACCESS. SOIL AMENDMENT AND SCARIFICATION WILL BE PROPOSED IN AREAS OF EXISTING COMPACTED FILL.

UTILIZE OTHER STRUCTURAL OR NONSTRUCTURAL BMPS THAT PREVENT OR MINIMIZE CHANGES IN STORMWATER RUNOFF
THE PROPOSED DEVELOPMENT HAS BEEN DESIGNED TO PROTECT EXISTING NATURAL RESOURCES TO THE FULLEST EXTENT IN ORDER TO PRESERVE NATURAL VEGETATION, IMPROVE STREAM QUALITY AND MAINTAIN THE EXISTING DRAINAGE PATTERNS AND DISCHARGE POINTS WHILE SATISFYING THE APPLICABLE WATER QUALITY AND RATE CONTROL CRITERIA AS REQUIRED NPDES AND THE TOWNSHIP ORDINANCE.

RECYCLING AND DISPOSAL OF MATERIALS §102.4(b)(5)(xi):

ALL BUILDING MATERIALS AND WASTES MUST BE REMOVED FROM THE SITE AND RECYCLED OR DISPOSED OF IN ACCORDANCE WITH THE DEPARTMENT'S SOLID WASTE MANAGEMENT REGULATIONS AT 25 PA CODE 260.1 ET SEQ., 271.1., AND 287.1 ET SEQ. NO BUILDING MATERIALS OR WASTES OR UNUSED BUILDING MATERIALS SHALL BE BURNED, BURIED, DUMPED OR DISCHARGED AT THE SITE.

THE FOLLOWING INFORMATION RELATIVE TO MATERIAL RECYCLING & DISPOSAL, AND FILL IS PROVIDED FOR THE SOLE PURPOSE OF GUIDANCE ONLY. COMPLIANCE WITH THESE GUIDELINES DOES NOT IMPLY OR PROVIDE ANY WARRANTY FOR ANY RELEASE OF LIABILITY FROM LOCAL, STATE OR FEDERAL REQUIREMENTS, REGULATIONS, AND/OR STATUTES; AND/OR DOES NOT IMPLY OR PROVIDE ANY WARRANTY FOR ANY RELEASE FROM COMPLIANCE WITH OBLIGATIONS AS MAY BE SET FORTH BY CONTRACTUAL SPECIFICATIONS AND GUIDELINES. SITE OPERATORS ARE THE CONTRACTOR, SUB-CONTRACTOR, PROPERTY OWNER, DEVELOPER AND/OR PERSON IN RESPONSIBLE CHARGE OF OVERALL SITE WORKS AND IMPLEMENTATION OF EROSION AND SEDIMENT CONTROL BMP'S.

WASTE MANAGEMENT:

1. BUILDING MATERIALS AND OTHER CONSTRUCTION SITE WASTES MUST BE PROPERLY MANAGED AND DISPOSED OF TO REDUCE POTENTIAL FOR POLLUTION TO SURFACE AND GROUND WATERS AS PER 25 PA. CODE §102.4(B)(5)(XI). PROPER TRASH DISPOSAL, RECYCLING OF MATERIALS, PROPER MATERIALS HANDLING, AND SPILL PREVENTION AND CLEAN-UP REDUCE THE POTENTIAL FOR CONSTRUCTION SITE WASTES TO BE MOBILIZED BY STORMWATER RUNOFF AND CONVEYED TO SURFACE WATERS.
2. TREES, STUMPS & BRUSH: CLEARING WASTE SHALL NOT BE BURIED OR BURNED. SUCH MATERIALS SHALL BE GROUND AND USED AS MULCH OR HAULED TO A MULCH RECYCLING FACILITY.
3. CEMENT CONCRETE WASTE MATERIAL: CEMENT CONCRETE WASTE MATERIALS MAY BE CRUSHED AND USED AS FILL WHEN POSSIBLE.
4. BITUMINOUS CONCRETE AND PAVING WASTE MATERIAL: SUCH MATERIALS SHALL NOT BE BURIED IN BULK ON-SITE. BITUMINOUS PAVING WASTES MAY BE CRUSHED/MILLED AND MIXED WITH AGGREGATE MATERIALS USED FOR CONSTRUCTION OF SIDEWALKS OR PARKING AREAS OUTSIDE OF PUBLIC RIGHT-OF-WAY; OR HAULED TO A FACILITY EQUIPPED TO RECYCLE SUCH MATERIAL. BITUMINOUS MATERIALS SUCH AS PAVEMENT SEALER, ROOFING MATERIAL, ETC. MUST BE DISPOSED OF AS BUILDING WASTE MATERIAL.
5. ROCK WASTE: ALL ROCK THAT IS SUITABLE FOR LANDSCAPING PURPOSES MAY BE UTILIZED ON-SITE OR AT ANOTHER FACILITY. ROCK MAY ALSO BE CRUSHED AND UTILIZED AS AGGREGATE CONSTRUCTION MATERIAL PROVIDED IT MEETS REQUIRED SPECIFICATIONS FOR SUCH USE, AND IS APPROVED FOR USE BY THE MUNICIPALITY AN/OR PENNDOT. ROCK MAY ONLY BE BURIED ON-SITE PROVIDED THE DISPOSAL PIT IS LOCATED OUTSIDE OF PUBLIC RIGHT-OF-WAY AND ANY EASEMENTS; AND PROVIDED THE EXCAVATION, PLACEMENT AND BACKFILLING IS ACCOMPLISHED IN SUCH A MANNER THAT VOIDING IS ELIMINATED.
6. SOIL WASTE: ALL EXCAVATED CLEAN FILL SOILS MAY BE UTILIZED ON-SITE AS FILL MATERIAL. EXCESS MATERIAL REMOVED FROM THE SITE MAY ONLY BE DISPOSED OF AT AN OFF-SITE LOCATION THAT HAS AN APPROVED NPDES PERMIT (WHERE APPLICATE); AN EROSION CONTROL PLAN APPROVED BY THE COUNTY CONSERVATION DISTRICT; AND WHERE ALL APPLICABLE EROSION CONTROL BMPS HAVE BEEN PROPERLY INSTALLED AND IMPLEMENTED.
7. BMP SEDIMENT DISPOSAL: SEDIMENT REMOVED FROM BMPS SHALL BE DISPOSED OF IN LANDSCAPED AREAS OUTSIDE OF STEEP SLOPES, WETLANDS, FLOOD PLAINS OR DRAINAGE SWALES AND IMMEDIATELY STABILIZED; OR PLACED IN TOPSOIL STOCKPILES.
a. LANDSCAPED AREAS SHALL BE UPLAND AREAS OUTSIDE OF ALL OTHER REGULATED WATERS OF THE COMMONWEALTH OF PA, AND ALL OTHER REGULATED WATERS OF THE UNITED STATED.
b. DOWNGRADE PERIMETER OF THE LANDSCAPED AREAS SHALL BE PROTECTED WITH SILT FENCE.
c. SEDIMENTS USED AS A TOPSOIL COVER IN LANDSCAPED AREAS, SHALL BE EVENLY SPREAD OVER THE DISPOSAL AREA.
d. IF THE LANDSCAPED AREA GRADING IS TEMPORARY, AREA SHALL BE IMMEDIATELY STABILIZED IN ACCORDANCE WITH TEMPORARY (INTERIM) REQUIREMENTS.
e. IF THE LANDSCAPED AREA GRADING IS PERMANENT, AREA SHALL BE IMMEDIATELY STABILIZED IN ACCORDANCE WITH PERMANENT (FINAL) REQUIREMENTS.
f. WHEN THE LANDSCAPED AREA HAS 70% UNIFORM PERENNIAL VEGETATIVE COVER OF SUFFICIENT DENSITY TO RESIST ACCELERATE EROSION, ALL TEMPORARY EROSION CONTROL WILL BE REMOVED, AND DISPOSED OF PROPERLY.

EXCESS SEDIMENT AND/OR SOILS MATERIAL REMOVED FROM THE SITE MAY ONLY BE DISPOSED OF AT AN OFF-SITE LOCATION THAT HAS AN APPROVED NPDES PERMIT (WHERE APPLICABLE); AN EROSION CONTROL PLAN APPROVED BY THE COUNTY CONSERVATION DISTRICT; AND WHERE ALL APPLICABLE EROSION CONTROL BMPS HAVE BEEN PROPERLY INSTALLED AND IMPLEMENTED.

SEQUENCE OF PCSM BMP IMPLEMENTATION AND INSTALLATION §102.8(f)(7):

BMP ID-1: RAIN GARDEN BASIN (BMP 6.4.5) (CRITICAL STAGE)

1. PROTECT BASIN AREA FROM COMPACTION TO MAXIMUM EXTENT PRACTICABLE PRIOR TO INSTALLATION.
2. IF POSSIBLE, INSTALL BASIN DURING LATER PHASES OF SITE CONSTRUCTION TO PREVENT SEDIMENTATION AND/OR DAMAGE FROM CONSTRUCTION ACTIVITY. AFTER INSTALLATION, PREVENT SEDIMENT LADEN WATER FROM ENTERING INLETS AND PIPES.
3. INSTALL AND MAINTAIN PROPER EROSION AND SEDIMENT CONTROL MEASURES DURING CONSTRUCTION.
4. INSTALL OUTLET CONTROL STRUCTURES.
5. CONTRACTOR TO PREVENT THE USE OF HEAVY EQUIPMENT OVER INSTALLED BASIN AREA DURING CONSTRUCTION.
6. DO NOT REMOVE INLET PROTECTION OR OTHER EROSION AND SEDIMENT CONTROL MEASURES UNTIL SITE IS FULLY STABILIZED.

BMP ID-2: RE-VEGETATE AND RE-FOREST DISTURBED AREAS (BMP 5.6.3)

1. SCARIFY EXISTING SOILS TO REDUCE COMPACTION
2. ON-SITE SOILS WITH ORGANIC CONTENT OF AT LEAST 5 PERCENT CAN BE PROPERLY STOCKPILED (TO MAINTAIN ORGANIC CONTENT) AND REUSED.
3. PROCEDURE: CONTRACTOR TO PROVIDE TOPSOIL/SOIL CONDITIONING IN ACCORDANCE WITH LANDSCAPE PLANTING PLAN SPECIFICATIONS. PLANTINGS TO BE NATIVE VEGETATION WITH APPROPRIATE GROUND COVER IN ACCORDANCE WITH LANDSCAPE PLANTING PLAN.
4. ALL DEBRIS FROM EXCAVATION SHALL BE DISPOSED OF IN ACCORDANCE WITH RECYCLING AND DISPOSAL OF MATERIAL SPECIFICATIONS.

THERMAL IMPACTS §102.4(b)(5)(xii):

THERMAL IMPACTS WILL BE MINIMIZED AND MITIGATED IN THE CONSTRUCTION (E&S) PHASE BY FILTERING RUNOFF THROUGH NATURAL VEGETATION, AND EROSION AND SEDIMENT CONTROLS PRIOR TO DISCHARGING OFF-SITE. COOLING WILL TAKE PLACE IN THE CONSTRUCTION (E&S) PHASE BECAUSE THE GROUND WILL NATURALLY COOL STORMWATER DURING CONSTRUCTION AS PAVEMENT WILL BE LIMITED AND BARE/STRIPPED EARTH WILL BE COOLER DURING CONSTRUCTION.

THERMAL IMPACTS WILL BE MINIMIZED AND MITIGATED IN THE POST CONSTRUCTION CONDITION VIA THE REDUCTION IN IMPERVIOUS COVERAGE. IN ACCORDANCE WITH THE PA BMP MANUAL RECOMMENDATIONS TO PROVIDE GROUNDWATER RECHARGE, WATER QUALITY AND PEAK FLOW RATES REDUCTION BENEFITS FOR THE CONTRIBUTING DRAINAGE AREA.

ERNST SEED CO. NATIVE DETENTION AREA SEEDING SPECIFICATIONS (ERNMX-183):

- SWITCHGRASS, 'SHAWNEE' (PANICUM VIRGATUM, 'SHAWNEE') REDTOP PANICGRASS,
- COASTAL PLAIN NC ECOTYPE (PANICUM RIGIDULUM (P. STIPITATUM),
- COASTAL PLAIN NC ECOTYPE) VIRGINIA WILDRYE,
- PA ECOTYPE (ELYMUS VIRGINICUS, PA ECOTYPE) GREEN BULRUSH,
- PA ECOTYPE (SCIRPUS ATROVIRENS, PA ECOTYPE) AUTUMN BENTGRASS,
- PA ECOTYPE (AGROSTIS PERENNANS, PA ECOTYPE) SOFT RUSH (JUNCUS EFFUSUS) TICKLEGRASS (ROUGH BENTGRASS),
- PA ECOTYPE (AGROSTIS SCABRA, PA ECOTYPE) PATH RUSH,
- PA ECOTYPE (JUNCUS TENUIS, PA ECOTYPE)

1. **SOW ABOVE MIX AT A RATE OF 20 LBS./ACRE OR 1/2 LB PER 1,000 S.F.**
2. **SUPPLEMENT ABOVE MIX WITH A COVER CROP OF GRAIN RYE AT 30 LBS/ACRE (SEP 1 TO APR 30) OR JAPENESE MILLET AT 10 LBS/ACRE (MAY 1 TO AUG 31).**
3. **MOW SEEDED AREA ONCE PER YEAR IN LATE SPRING.**

- THE ROLE OF PLANTS IN ALL STORM WATER MANAGEMENT FACILITIES IS TO PREVENT EROSION AND SLOW WATER MOVEMENT, HOLD OR CONVERT POLLUTANTS, ENHANCE INFILTRATION AND EVAPOTRANSPIRATION, AND ENCOURAGE WILDLIFE. THE DESIGNER CAN SELECT PLANT SPECIES OR MIXES THAT MEET THE CRITICAL OBJECTIVES AND EXTREME CONDITIONS UNDER WHICH PLANTS MUST SURVIVE. NATIVE GRASSES ESTABLISH RAPIDLY, WITH FIBROUS ROOT SYSTEMS THAT TOLERATE FAST-MOVING WATER. HERBACEOUS SPECIES PLAY THE ROLE OF ADDING AESTHETICS, TEXTURE, AND INVASIVE SPECIES, PARTICULARLY THOSE THAT WILL ADAPT TO WET CONDITIONS, SHOULD BE REMOVED OR SPRAYED BEFORE THEY BECOME INCORPORATED INTO THE SITE.
- NORMAL VEGETATION CAN BE WORKED INTO THE TOPSOIL, WHICH SHOULD BE STOCKPILED UNTIL THE FINAL GRADE HAS BEEN ESTABLISHED. WITH THE ENGINEER'S SPECIFICATIONS AND DIMENSIONS IN HAND, ON-SITE CONSTRUCTION OF THE BERM AND OUTLETS MUST BE EXECUTED CAREFULLY IN ORDER TO MAINTAIN STRUCTURAL INTEGRITY. THE INFILTRATION AND PLANT GROWTH AREAS SHOULD BE LOOSE AND FRIABLE, HIGH IN ORGANIC MATTER, AND COMPLETED WITHOUT COMPACTIONS FROM METHOD, ONE CAN USE AN EXCAVATOR TO DIG AND DROP EACH AREA OF THE BOTTOM SOIL IN A LOOSE MANNER. AT THIS POINT, ONE CAN INCORPORATE LIME, COMPOSTED LEAVES, AND/OR GRASS CLIPPINGS. THE EXCAVATION MACHINE DOES NOT MOVE OVER THE FINISHED SEEDING AND PLANTING METHODS SEEDING AND PLANTING SHOULD BEGIN IMMEDIATELY UPON COMPLETION OF THE STRUCTURE WHEN THE SOIL IS STILL FRIABLE AND BEFORE INVASIVE WEEDS EMERGE.
- PLAN SEEDING AND PLANTING BEFORE THE BASIN IS FLOODED, OR ALLOW THE BASIN TO DRAIN TO A FEW INCHES BEFORE SEEDING. BROADCAST SEED EVENLY OVER EACH UNIT BY HAND SEEDING OR HYDROSEEDING. SEEDING RATES ARE GENERALLY LOW (1/2 LB PER 1,000 SQ FT). THE USE OF A SEED FILLER; I.E., PAM-12, CAN BE USED TO CREATE A MIX OF 10 LB PER 1,000 SQ FT (I.E., 9-1/2 LB OF PAM-12 MIXED WITH 1/2 LB OF SEED), WHICH CAN BE BROADCAST EVENLY OVER THE AREA. BARLEY, OATS, OR RYE CAN PROVIDE TEMPORARY VEGETATION TO PROTECT THE SOIL IN STORM WATER MANAGEMENT FACILITIES UNTIL PERMANENT VEGETATION CAN BE ESTABLISHED. THE USE OF NATIVE SPECIES; I.E., VIRGINIA WILD RYE, CAN CREATE AN INTERMEDIATE VEGETATIVE COVER THAT SUCCEEDS TO NATIVE LONG-TERM VEGETATION. STRAW MULCH OR STRAW COCONUT MATS ARE FREQUENTLY USED TO CONTROL EROSION AND PROTECT EMERGING SEEDLINGS FROM EXTREME TEMPERATURES AND DRYING OUT. MULCH SHOULD BE SPARSE TO ALLOW SUNLIGHT TO REACH THE GROUND. TRANSPLANTED SEEDLINGS AND SHRUBS NEED TEMPORARY WATER UNTIL THEY BECOME WELL ROOTED. IRRIGATION OF SEEDED AREAS IS OF VALUE UNTIL SEEDLINGS BECOME ESTABLISHED.
- GENERAL MAINTENANCE IN ADDITION TO STRUCTURAL MAINTENANCE, SILTATION NEEDS TO BE REMOVED AS NEEDED. PLANTS NEED TO BE TRIMMED BACK TO MAINTAIN AESTHETIC VALUE AND INVASIVE SPECIES NEED TO BE CONTROLLED. CLOSE MOWING OR EXTENSIVE CHEMICAL

DYNAMIC • ENGINEERING • EARTH • SURVEY • TRAFFIC

REV.	DATE	COMMENTS	BY

POST CONSTRUCTION STORMWATER MANAGEMENT PLANS

DRAWN BY: CMC | DESIGNED BY: MS | CHECKED BY: MAW | CHECKED BY: –

PROJECT: SWATARA PAXTON DEVELOPERS LLC
PROPOSED WAWA FOOD MARKET & FUELING STATION
PARCEL NO. 63-022-037
US ROUTE 322 & BRIDGE ROAD (SR 2018)
TOWNSHIP OF SWATARA, DAUPHIN COUNTY, PENNSYLVANIA

811 Know what's below. Call before you dig.
PROTECT YOURSELF
ALL STATES REQUIRE NOTIFICATION OF EXCAVATORS, DESIGNERS, OR ANY PERSON PREPARING TO DISTURB THE EARTH'S SURFACE ANYWHERE IN ANY STATE
FOR STATE SPECIFIC DIRECT PHONE NUMBERS VISIT: WWW.CALL811.COM

DYNAMIC ENGINEERING
LAND DEVELOPMENT CONSULTING • PERMITTING
GEOTECHNICAL • ENVIRONMENTAL
TRAFFIC • SURVEY • PLANNING & ZONING
826 Newtown Yardley Road
Suite 201, Newtown, PA 18940
T: 267.685.0276 | F: 267.685.0361
Offices conveniently located at:
Lake Como, New Jersey • T: 732.974.0198
Chester, New Jersey • T: 908.879.9229
Marlton, New Jersey • T: 856.334.2000
Newark, New Jersey • T: 973.755.7200
Toms River, New Jersey • T: 732.974.0198
Newtown, Pennsylvania • T: 267.685.0276
Philadelphia, Pennsylvania • T: 215.253.4888
Bethlehem, Pennsylvania • T: 610.598.4400
Allen, Texas • T: 972.534.2100
Houston, Texas • T: 281.789.6400
Austin, Texas • T: 512.646.2646
Delray Beach, Florida • T: 561.921.8570
Annapolis, Maryland • T: 410.567.5000
www.dynamicec.com

JUSTIN A. GEONNOTTI
PROFESSIONAL ENGINEER
PENNSYLVANIA LICENSE No. 080629

MARK A. WHITAKER
PROFESSIONAL ENGINEER
NEW JERSEY LICENSE No. 41417

TITLE: PCSM NOTES

SCALE: (H) AS (V) SHOWN | DATE: 11/21/2023
PROJECT No: 1478-99-212

Plotted: 11/22/23 – 12:43 PM, By: nschechter
File: P:\DECPC PROJECTS\1478 Paramount Realty\99-212 Swatara PA\Dwg\Land Dev Plans\D147899212PN0.dwg, ---> 27 PCSM NOTES

COPYRIGHT © 2023 – DYNAMIC ENGINEERING CONSULTANTS, PC – ALL RIGHTS RESERVED

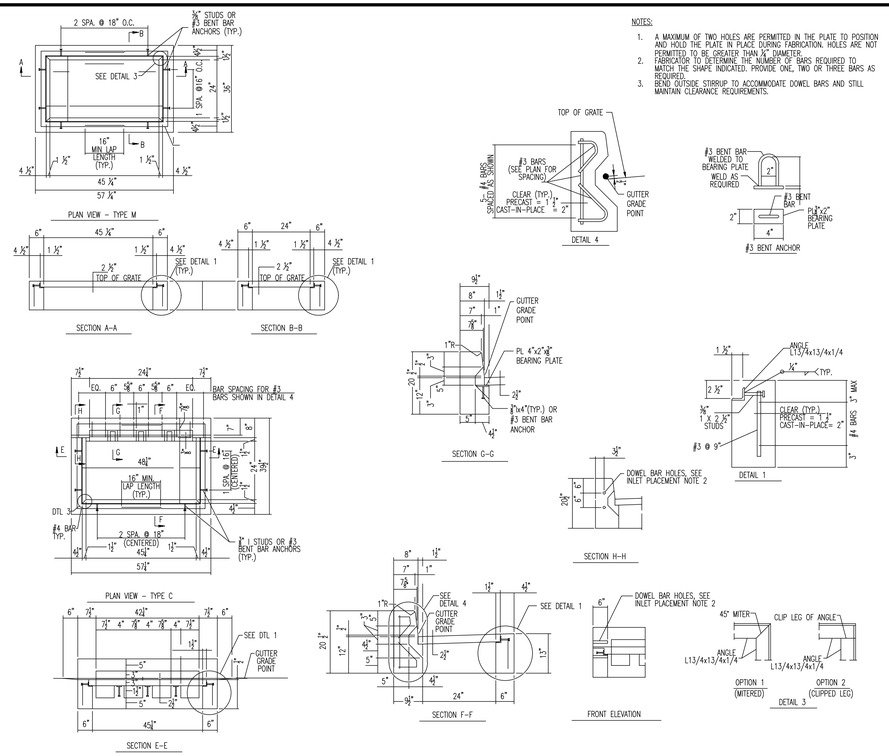

NOTES:

1. A MAXIMUM OF TWO HOLES ARE PERMITTED IN THE PLATE TO POSITION AND HOLD THE PLATE IN PLACE DURING FABRICATION. HOLES ARE NOT PERMITTED TO BE GREATER THAN 3/4" DIAMETER.
2. FABRICATOR TO DETERMINE THE NUMBER OF BARS REQUIRED TO MATCH THE SHAPE INDICATED. PROVIDE ONE, TWO OR THREE BARS AS REQUIRED.
3. BEND OUTSIDE STIRRUP TO ACCOMMODATE DOWEL BARS AND STILL MAINTAIN CLEARANCE REQUIREMENTS.

PENNDOT INLET TOPS & GRATES DETAIL

NOT TO SCALE

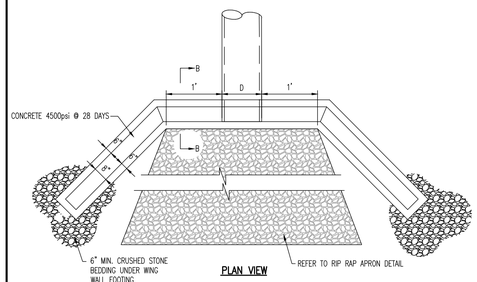

PLAN VIEW

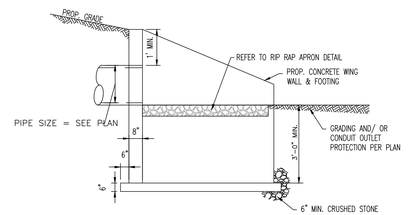

SECTION B–B

PRECAST CONCRETE HEADWALL DETAIL

NOT TO SCALE

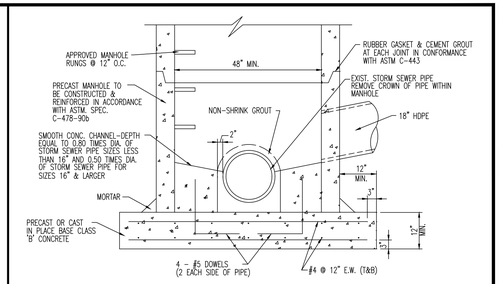

NOTES:

1. TWO SEPARATE COATS OF APPROVED BITUMASTIC WATERPROOFING COMPOUND SHALL BE APPLIED PER MANUFACTURERS INSTRUCTIONS TO THE ENTIRE EXTERIOR OF STRUCTURE.
2. TWO SEPARATE COATS OF APPROVED TWO-PART EPOXY COATING SHALL BE APPLIED PER MANUFACTURERS INSTRUCTIONS TO THE ENTIRE INTERIOR OF STRUCTURE.

STORM SEWER DOGHOUSE MANHOLE DETAIL

NOT TO SCALE

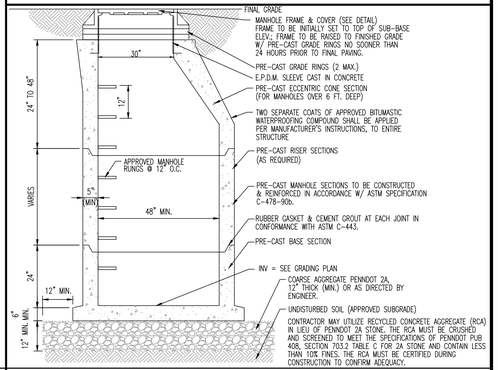

TYPICAL PRECAST STORM MANHOLE

NOT TO SCALE

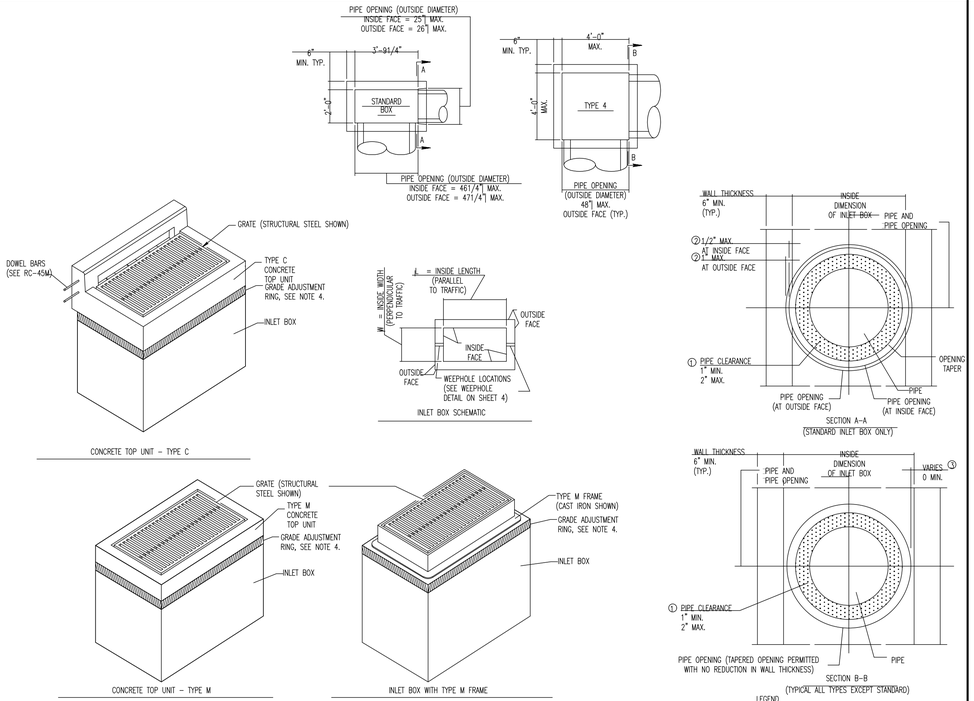

LEGEND

1. OUTSIDE DIAMETER OF PIPE TO PIPE OPENING
2. REDUCTION IN WALL THICKNESS DIMENSION
3. INSIDE FACE OF BOX WALL TO OUTSIDE DIAMETER OF PIPE OPENING

PENNDOT TYPE 'M' & TYPE 'C' INLET BOXES & ASSEMBLIES DETAIL

NOT TO SCALE

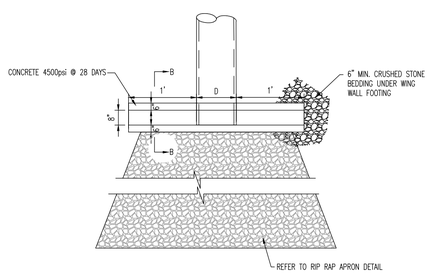

PLAN VIEW

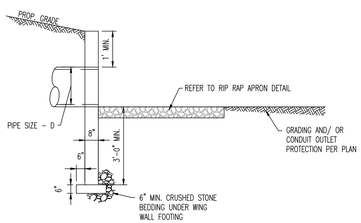

SECTION B–B

PRECAST CONCRETE HEADWALL DETAIL

NOT TO SCALE

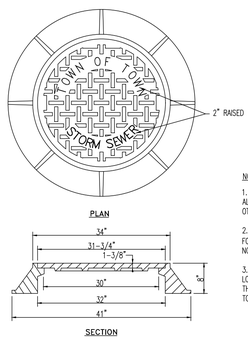

NOTES:

1. STANDARD MANHOLE FRAMES & COVERS SHALL BE USED ON ALL MANHOLES NOT LOCATED WITHIN EASEMENTS UNLESS DIRECTED OTHER-WISE BY THE ENGINEER OR TOWNSHIP REPRESENTATIVE.
2. STANDARD MANHOLE FRAME & COVER SHALL BE CAMPBELL FOUNDRY PATTERN # 1012B, OR APPROVED EQUAL, WITH NON-PENETRATING PICK HOLES.
3. WATERTIGHT MANHOLE COVERS SHALL BE USED ON MANHOLES LOCATED WITHIN EASEMENTS, IN UNPAVED AREAS, AND OUTSIDE OF THE CENTERLINE OF PAVED ROADS AS DIRECTED BY ENGINEER OR TOWNSHIP REPRESENTATIVE.

STORM MANHOLE FRAME DETAIL

NOT TO SCALE

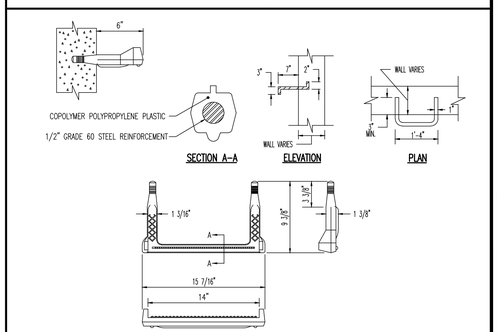

STEEL REINFORCED COPOLYMER POLYPROPYLENE LADDER RUNG

NOTE: LADDER RUNGS FACING TRAFFIC 12" C TO C

LADDER RUNG DETAIL

NOT TO SCALE

DYNAMIC ENGINEERING CONSULTANTS, PC
SURVEY • TRAFFIC

REV.	DATE	COMMENTS	BY

POST CONSTRUCTION STORMWATER MANAGEMENT PLANS

DRAWN BY: CMC | DESIGNED BY: MS | CHECKED BY: MAW | CHECKED BY: –

PROJECT: SWATARA PAXTON DEVELOPERS LLC
PROPOSED WAWA FOOD MARKET & FUELING STATION
PARCEL NO. 63-022-037
US ROUTE 322 & BRIDGE ROAD (SR 2018)
TOWNSHIP OF SWATARA, DAUPHIN COUNTY, PENNSYLVANIA

811 Know what's below. Call before you dig.
PROTECT YOURSELF
ALL STATES REQUIRE NOTIFICATION OF EXCAVATORS, DESIGNERS, OR ANY PERSON PREPARING TO DISTURB THE EARTH'S SURFACE ANYWHERE IN ANY STATE
FOR STATE SPECIFIC DIRECT PHONE NUMBERS VISIT: WWW.CALL811.COM

DYNAMIC ENGINEERING
LAND DEVELOPMENT CONSULTING • PERMITTING
GEOTECHNICAL • ENVIRONMENTAL
TRAFFIC • SURVEY • PLANNING & ZONING
826 Newtown Yardley Road
Suite 201, Newtown, PA 18940
T: 267.685.0276 | F: 267.685.0361
Offices conveniently located at:
Lake Ronkonkoma, New York • T: 631.737.1577
Clinton, New Jersey • T: 908.879.9229
Wall-Hill, New Jersey • T: 856.374.2000
Neward, New Jersey • T: 973.735.7200
Toms River, New Jersey • T: 732.974.0198
Newtown, Pennsylvania • T: 267.685.0276
Philadelphia, Pennsylvania • T: 215.520.4888
Bethlehem, Pennsylvania • T: 610.595.4400
Allen, Texas • T: 972.334.7200
Houston, Texas • T: 281.789.6400
Aurora, Illinois • T: 331.444.7514
Delray Beach, Florida • T: 561.921.8370
Annapolis, Maryland • T: 410.647.3000
www.dynamicec.com

JUSTIN A. GEONNOTTI
PROFESSIONAL ENGINEER
PENNSYLVANIA LICENSE NO. 080629

MARK A. WHITAKER
PROFESSIONAL ENGINEER
NEW JERSEY LICENSE No. 41417

TITLE: PCSM DETAILS

SCALE: (H) AS (V) SHOWN | DATE: 11/21/2023
PROJECT No: 1478-99-212

SHEET No: 28 OF 34 | Rev. #: 0

Plotted: 11/22/23 – 12:43 PM, By: nschechter
File: P:\DEDPC PROJECTS\1478 Paxmount Realty\99-212 Swatara PA\Dwg\Land Dev Plans\D147899212PD0.dwg, ---> 28 PCSM DETAILS

COPYRIGHT © 2023 – DYNAMIC ENGINEERING CONSULTANTS, PC – ALL RIGHTS RESERVED

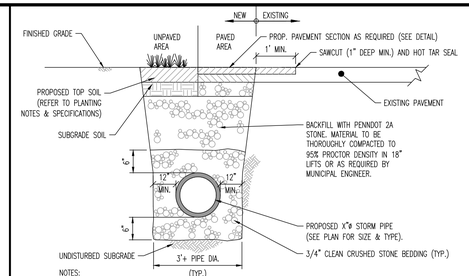

NOTES:
1. PAVEMENT SECTION SHALL BE PER PAVEMENT DETAIL OR TO MATCH ADJOINING EXISTING PAVEMENT SECTION.
2. X" – SEE PLAN FOR PIPE DIAMETER.
3. ALL CONSTRUCTION SHALL BE IN ACCORDANCE WITH THE LATEST OSHA STANDARDS.
4. ALL TRENCHES IN EXISTING PAVEMENT SHALL BE SAWCUT.
5. ALL DISTURBED TRAFFIC STRIPING AND PAVEMENT MARKING SHALL BE REPLACED WITH APPROVED EQUAL MATERIALS.
6. CONTRACTOR MAY UTILIZE RECYCLED CONCRETE AGGREGATE (RCA) IN LIEU OF PENNDOT 2A STONE. THE RCA MUST BE CRUSHED AND SCREENED TO MEET THE SPECIFICATIONS OF PENNDOT PUB 408, SECTION 703.2 TABLE C FOR 2A STONE AND CONTAIN LESS THAN 10% FINES. THE RCA MUST BE CERTIFIED DURING CONSTRUCTION TO CONFIRM ADEQUACY.

STORM SEWER TRENCH DETAIL

NOT TO SCALE

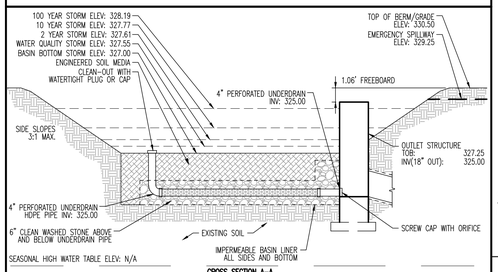

CROSS SECTION A–A

ENGINEERED SOIL MEDIA FOR BASIN AND RAIN GARDENS:
–MINIMUM 50% SAND (ALL SAND MUST MEET #4 SAND BLEND SPECIFICATIONS OR APPROVED EQUAL)
–APPROX. 25% – 30% COMPOST (LEAF COMPOST PREFERABLE, WELL – COMPOSTED) –APPROX. 20–25% TOPSOIL (NATURAL TOPSOIL FROM SITE, WHENEVER POSSIBLE)
–TOPSOIL SHOULD BE SELECTED FROM THE BEST AVAILABLE ON SITE. TOPSOIL MUST BE NO MORE THAN 10% CLAY, AND SCREENED AND BROKEN INTO FINE PIECES (< 1 INCH) PRIOR TO MIXING WITH COMPOST AND SAND.
–FINAL ENGINEERED SOIL MEDIA MIX SHALL BE FREE OF STONES, STUMPS, ROOTS, BRUSH, OR BRANCHES OVER 1 INCH IN DIAMETER. THE FINAL SOIL MEDIA SHOULD RESEMBLE A SANDY LOAM OR LOAMY SAND AS DEFINED BY THE USDA.

RAIN GARDEN WITH UNDERDRAIN DETAIL

NOT TO SCALE

BOX SIZE	(A)	(B)
48"x48" ID TYPE 4	60"	60"
60"x60" ID TYPE 5	72"	72"
72"x72" ID TYPE 6	84"	84"
72"x72" ID W/8" WALL	88"	88"

MANHOLE OPENING TO BE LOCATED AS REQUIRED BY FIELD CONDITIONS

NOTE: 24" DIA. MANHOLE OPENING SHOWN. AVAILABLE WITH UP TO 36" DIA. MANHOLE OPENING.

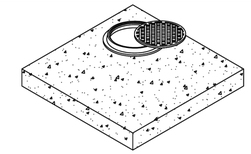

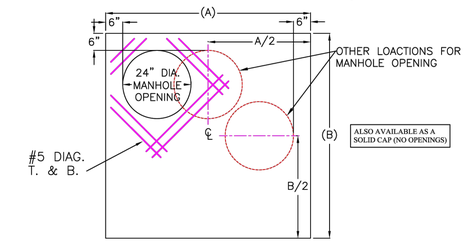

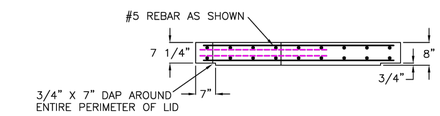

SPECIFICATIONS:
MINIMUM CONCRETE STRENGTH 4000 PSI @ 28 DAYS (PENNDOT CLASS AA)
MATERIALS AND WORKMANSHIP IN ACCORDANCE WITH THE REQUIREMENTS OF PENNDOT PUBLICATION 408 SECTION 605 & 714
STEEL REINFORCEMENT A615 GRADE 60 HORIZONTAL AND VERTICAL

Continental Concrete Products, Inc.
1 South Grosstown Rd.
Pottstown, PA 19464
Phone: (610) 327-3700
Fax: (610) 327-9488

48" X 48", 60" X 60" & 72" X 72" INLET CONVERSION LID w/ MAX. 36" DIA. MANHOLE FRAME & COVER

SIGNATURE OF APPROVAL	DATE	IAR	DWG	STRUCTURE
	2/08/16		48x48/72x72–MHCV	

BOX SIZE	(A)	(B)	(C)	(D)	(E)	(F)	MAX WEIGHT
48"X48" TYPE 4	48"	48"	MAX 72"	MAX 70"	6"	6"	5 TONS
60"X60" TYPE 5	60"	60"	MAX 72"	MAX 70"	6"	6"	6 TONS
72"X72" TYPE 6	72"	72"	MAX 96"	MAX 94"	6"	8"	9 TONS

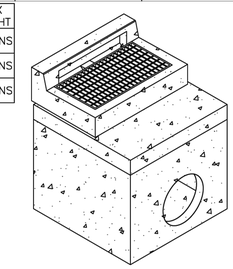

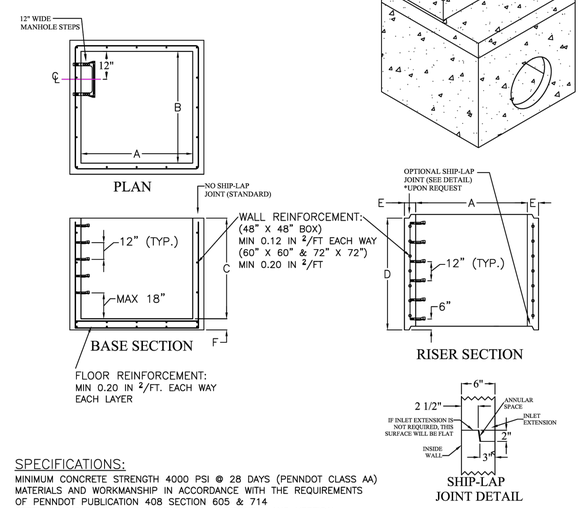

SPECIFICATIONS:
MINIMUM CONCRETE STRENGTH 4000 PSI @ 28 DAYS (PENNDOT CLASS AA)
MATERIALS AND WORKMANSHIP IN ACCORDANCE WITH THE REQUIREMENTS OF PENNDOT PUBLICATION 408 SECTION 605 & 714
STEEL REINFORCEMENT A615 GRADE 60 HORIZONTAL AND VERTICAL

Continental Concrete Products, Inc.
1 South Grosstown Rd.
Pottstown, PA 19464
Phone: (610) 327-3700
Fax: (610) 327-9488

48" X 48", 60" X 60" & 72" X 72" INLET BOX & RISER SECTION (MODIFIED INLET BOX FOR LARGE PIPE)

SIGNATURE OF APPROVAL	DATE	IAR	DWG	STRUCTURE
	2/08/16		4X4–6X6IB	

DYNAMIC ENGINEERING CONSULTANTS, PC
DESIGN • ENVIRONMENTAL • SURVEY • TRAFFIC

REV.	DATE	COMMENTS	BY

POST CONSTRUCTION STORMWATER MANAGEMENT PLANS

DRAWN BY: NJS
DESIGNED BY: MS
CHECKED BY: MAW
CHECKED BY: –

PROJECT: SWATARA PAXTON DEVELOPERS LLC
PROPOSED WAWA FOOD MARKET & FUELING STATION
PARCEL NO. 63–022–037
US ROUTE 322 & BRIDGE ROAD (SR 2018)
TOWNSHIP OF SWATARA, DAUPHIN COUNTY, PENNSYLVANIA

811 Know what's below. Call before you dig.
PROTECT YOURSELF
ALL STATES REQUIRE NOTIFICATION OF EXCAVATORS, DESIGNERS, OR ANY PERSON PREPARING TO DISTURB THE EARTH'S SURFACE ANYWHERE IN ANY STATE
FOR STATE SPECIFIC DIRECT PHONE NUMBERS VISIT: WWW.CALL811.COM

DYNAMIC ENGINEERING
LAND DEVELOPMENT CONSULTING • PERMITTING
GEOTECHNICAL • ENVIRONMENTAL
TRAFFIC • SURVEY • PLANNING & ZONING
826 Newtown Yardley Road
Suite 201, Newtown, PA 18940
T: 267.685.0276 | F: 267.685.0361
Offices conveniently located at:
Lakehurst, New Jersey • T: 732.712.9778
Clinton, New Jersey • T: 908.879.9229
Mattituck, New Jersey • T: 856.304.2000
Newark, New Jersey • T: 973.733.7200
Toms River, New Jersey • T: 732.974.0198
Newtown, Pennsylvania • T: 267.685.0276
Philadelphia, Pennsylvania • T: 215.232.4888
Bethlehem, Pennsylvania • T: 610.395.4400
Allen, Texas • T: 972.334.7700
Houston, Texas • T: 281.789.6400
Kihei, Maui • T: 310.944.7954
Delray Beach, Florida • T: 561.921.8370
Annapolis, Maryland • T: 410.547.3000
www.dynamicec.com

JUSTIN A. GEONNOTTI
PROFESSIONAL ENGINEER
PENNSYLVANIA LICENSE No. 080629

MARK A. WHITAKER
PROFESSIONAL ENGINEER
NEW JERSEY LICENSE No. 41417

TITLE: PCSM DETAILS

SCALE: (H) AS (V) SHOWN
DATE: 11/21/2023
PROJECT No: 1478–99–212

SHEET No: 29 OF 34
Rev. #: 0

Plotted: 11/22/23 – 12:43 PM, By: rschechter
File: P:\DEPC PROJECTS\1478 Paramount Realty\99–212 Swatara PA\Dwg\Land Dev Plans\D1478992129D0.dwg, ---> 29 PCSM DETAILS

COPYRIGHT © 2023 – DYNAMIC ENGINEERING CONSULTANTS, PC – ALL RIGHTS RESERVED

THIS PLAN TO BE UTILIZED FOR SOIL EROSION & SEDIMENT CONTROL PURPOSES ONLY

SEE SHEET 32-34 OF 34 FOR SOIL EROSION NOTES & DETAILS

LIMIT OF DISTUBANCE & PROJECT SITE BOUNDARY = 125,188 SF (2.87 AC)

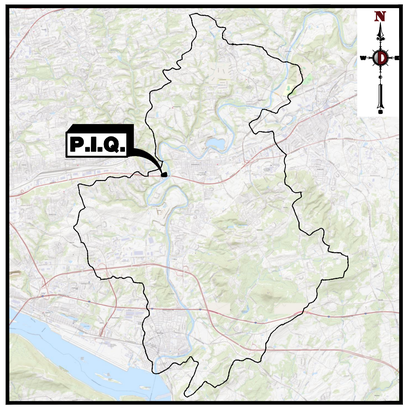

SWATARA CREEK WATERSHED MAP
1" = 10,000'

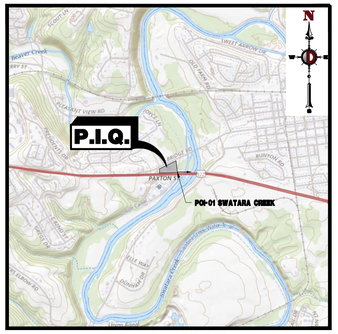

USGS MAP
1" = 2000'

E&S CONTROL LEGEND

- EXISTING TITLE LINE (PARCEL IN QUESTION)
- EXISTING R.O.W LINE (PARCEL IN QUESTION)
- PROPERTY LINE (PARCEL IN QUESTION)
- ULTIMATE RIGHT OF WAY LINE
- OFF-SITE PROPERTY LINES
- PROPOSED LIMIT OF DISTURBANCE LINE
- PROPOSED TREE PROTECTION FENCE (TPF)
- PROP. COMPOST FILTER SOCK (CFS)
- PROP. CONSTRUCTION FENCE
- PROP. LIMIT OF PROJECT SITE BOUNDARY LINE (NPDES) (PSB)
- EXIST. SOIL BOUNDARY
- SILT FENCE (SF)
- ORANGE SUPER SILT FENCE
- DRAINAGE AREA LINES
- EXIST. FLOODPLAIN LINE
- EXIST. MINOR CONTOUR & ELEVATION
- EXIST. MAJOR CONTOUR & ELEVATION
- PROP. FINISH GRADE CONTOUR & ELEVATION (XX)
- BeB2 — SOIL IDENTITY
- EXIST. TREE LINES / PROP. TREE LINES
- EXIST. TREES / PROP. TREES
- EXIST. MONITORING WELL
- APPROX. STORMWATER TEST PIT LOCATION
- APPROX. BORING LOCATION
- PROP. EROSION CONTROL BLANKET

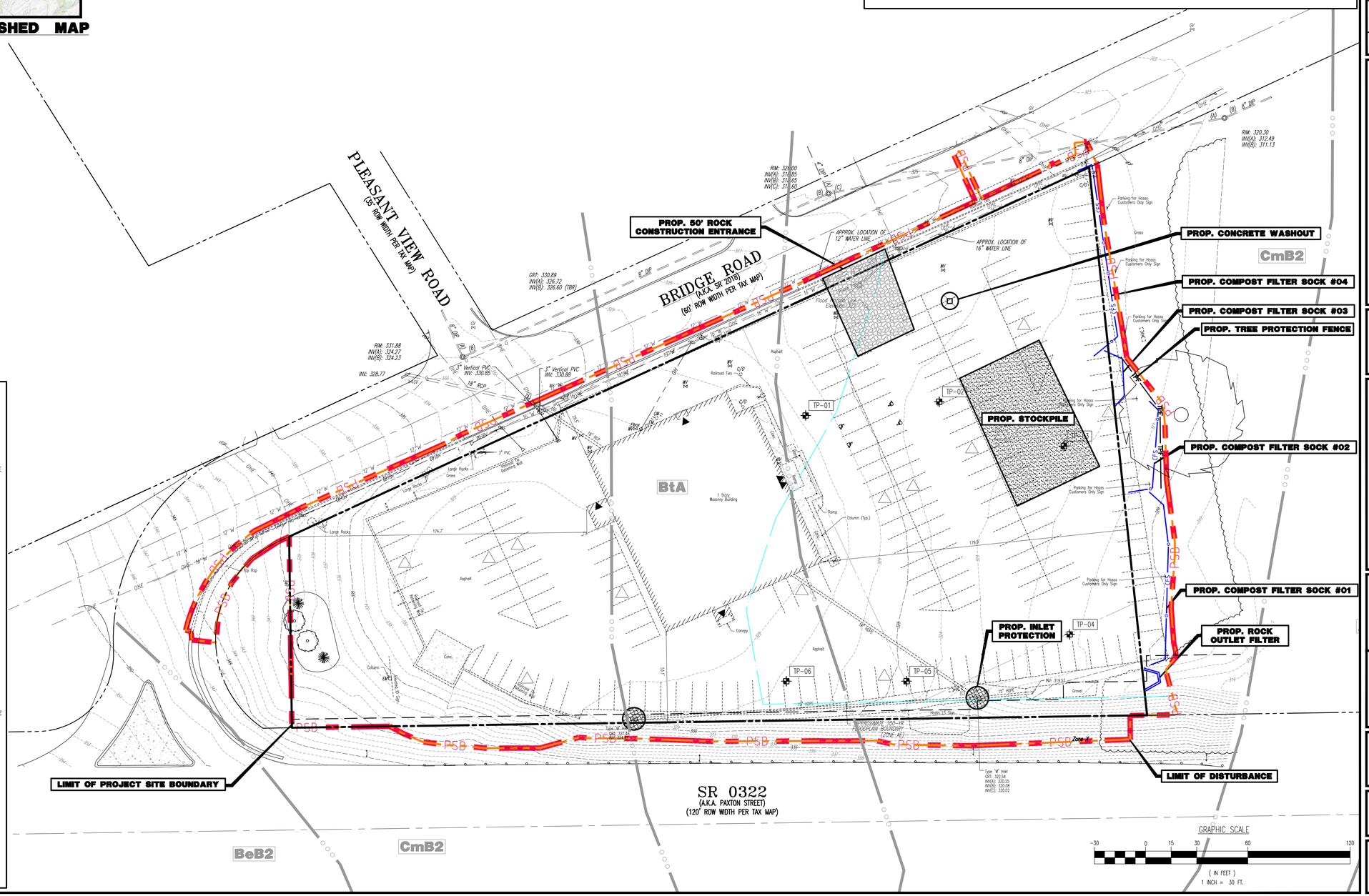

UTILITY GRAPHIC LEGEND

- EXIST. CABLE LINE
- EXIST. ELECTRIC LINE
- EXIST. FIBER OPTIC LINE
- EXIST. GAS LINE
- EXIST. OVERHEAD WIRES
- EXIST. TELEPHONE LINE
- EXIST. UNDERGROUND ELEC./TELE. SERVICE (NO. & SIZE OF CONDUITS NOT DEFINED)
- EXIST. WATER LINE
- EXIST. SANITARY SEWER LINE
- EXIST. STORM DRAIN LINE
- EXIST. UTILITY POLE
- EXIST. GUY WIRE
- EXIST. LIGHT POLE
- EXIST. BUILDING LIGHT
- EXIST. SHOE BOX LIGHT
- EXIST. COBRA LIGHT POLE
- EXIST. TRAFFIC SIGNAL POLE
- EXIST. MANHOLE
- EXIST. "M" INLET
- EXIST. "C" INLET
- EXIST. DOUBLE "M" INLET
- EXIST. YARD INLET
- EXIST. FLARED END SECTION
- EXIST. HEADWALL
- PROP. CABLE LINE
- PROP. ELECTRIC LINE
- PROP. FIBER OPTIC LINE
- PROP. GAS LINE
- PROP. OVERHEAD WIRES
- PROP. TELEPHONE LINE
- PROP. UNDERGROUND ELEC./TELE. SERVICE (NO. & SIZE OF CONDUITS NOT DEFINED)
- PROP. WATER LINE
- PROP. SANITARY SEWER LINE
- PROP. STORM DRAIN LINE
- PROP. UTILITY POLE
- PROP. AREA LIGHT
- PROP. DRAINAGE MANHOLE
- PROP. "M" INLET
- PROP. "C" INLET
- PROP. DOUBLE "M" INLET
- PROP. YARD INLET
- PROP. FLARED END SECTION
- PROP. HEADWALL
- PROP. OUTLET CONTROL STRUCTURE
- PROP. SANITARY SEWER MANHOLE

Plotted: 11/22/23 – 12:43 PM, By: nachester
File: P:\DECPC PROJECTS\1478 Paramount Realty\99-212 Swatara PA\Dwg\Land Dev Plans\01478992122EXS0.dwg, ---> 30 EXISTING E&S PLAN

COPYRIGHT © 2023 – DYNAMIC ENGINEERING CONSULTANTS, PC – ALL RIGHTS RESERVED

DYNAMIC ENGINEERING CONSULTANTS, PC • DESIGN • ENVIRONMENTAL • SURVEY • TRAFFIC

REV.	DATE	COMMENTS	BY

EROSION & SEDIMENT CONTROL PLANS

DRAWN BY: LZ | DESIGNED BY: MS | CHECKED BY: MAW | CHECKED BY: –

PROJECT: SWATARA PAXTON DEVELOPERS LLC
PROPOSED WAWA FOOD MARKET & FUELING STATION
PARCEL NO. 63-022-037
US ROUTE 322 & BRIDGE ROAD (SR 2018)
TOWNSHIP OF SWATARA, DAUPHIN COUNTY, PENNSYLVANIA

811 Know what's below. Call before you dig.
PROTECT YOURSELF
ALL STATES REQUIRE NOTIFICATION OF EXCAVATORS, DESIGNERS, OR ANY PERSON PREPARING TO DISTURB THE EARTH'S SURFACE ANYWHERE, IN ANY STATE
FOR STATE SPECIFIC DIRECT PHONE NUMBERS VISIT: WWW.CALL811.COM

DYNAMIC ENGINEERING
LAND DEVELOPMENT CONSULTING • PERMITTING
GEOTECHNICAL • ENVIRONMENTAL
TRAFFIC • SURVEY • PLANNING & ZONING
826 Newtown Yardley Road
Suite 201, Newtown, PA 18940
T: 267.685.0276 | F: 267.685.0361
Offices conveniently located at:
Lake Success, New Jersey • T: 732.974.0198
Chanel, New Jersey • T: 856.879.9229
Midtown, New Jersey • T: 856.334.2000
Neiwark, New Jersey • T: 973.735.7200
Toms River, New Jersey • T: 732.974.0198
Newtown, Pennsylvania • T: 267.685.0276
Philadelphia, Pennsylvania • T: 215.233.4888
Bethlehem, Pennsylvania • T: 610.398.4400
Allen, Texas • T: 972.534.3100
Houston, Texas • T: 281.799.4400
Austin, Texas • T: 512.644.7543
Delray Beach, Florida • T: 561.372.8200
Annapolis, Maryland • T: 410.567.3000
www.dynamicec.com

JUSTIN A. GEONNOTTI
PROFESSIONAL ENGINEER
PENNSYLVANIA LICENSE No. 080629

MARK A. WHITAKER
PROFESSIONAL ENGINEER
NEW JERSEY LICENSE No. 41417

TITLE: EXISTING E&S PLAN

SCALE: (H) 1"=30' (V) | DATE: 11/21/2023
PROJECT No: 1478-99-212

SHEET No: 30 OF 34 | Rev. #: 0

THIS PLAN TO BE UTILIZED FOR SOIL EROSION & SEDIMENT CONTROL PURPOSES ONLY

SEE SHEET 32-34 OF 34 FOR SOIL EROSION NOTES & DETAILS

LIMIT OF DISTUBANCE & PROJECT SITE BOUNDARY = 125,188 SF (2.87 AC)

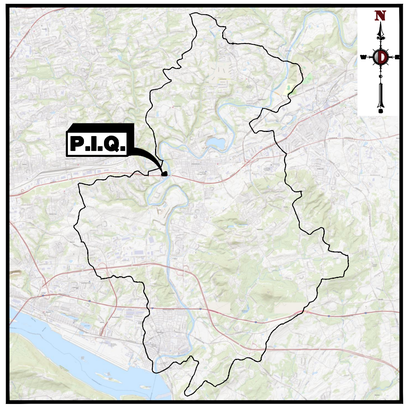

SWATARA CREEK WATERSHED MAP

1" = 10,000'

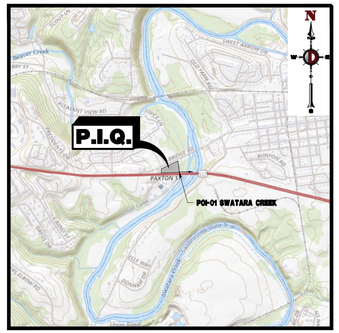

USGS MAP

1" = 2000'

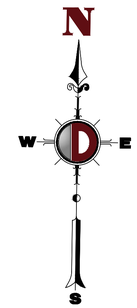

E&S CONTROL LEGEND

- EXISTING TITLE LINE (PARCEL IN QUESTION)
- EXISTING R.O.W LINE (PARCEL IN QUESTION)
- PROPERTY LINE (PARCEL IN QUESTION)
- ULTIMATE RIGHT OF WAY LINE
- OFF-SITE PROPERTY LINES
- PROPOSED LIMIT OF DISTURBANCE LINE
- TPF — PROPOSED TREE PROTECTION FENCE
- CFS — PROP. COMPOST FILTER SOCK
- PROP. CONSTRUCTION FENCE
- PSB — PROP. LIMIT OF PROJECT SITE BOUNDARY LINE (NPDES)
- EXIST. SOIL BOUNDARY
- SF — SILT FENCE
- ORANGE SUPER SILT FENCE
- DRAINAGE AREA LINES
- PROP. 100-YEAR FLOODPLAIN LINE
- EXIST. MINOR CONTOUR & ELEVATION
- EXIST. MAJOR CONTOUR & ELEVATION
- XX — PROP. FINISH GRADE CONTOUR & ELEVATION
- BeB2 — SOIL IDENTITY
- EXIST. TREE LINES / PROP. TREE LINES
- EXIST. TREES / PROP. TREES
- EXIST. MONITORING WELL / PROP. RIP-RAP APRON
- APPROX. STORMWATER TEST PIT LOCATION
- APPROX. BORING LOCATION / PROP. INLET FILTER
- PROP. CONCRETE WASHOUT
- TEMP STOCKPILE / PROP. EROSION CONTROL BLANKET
- R-3 RIP RAP SLOPE STABILIZATION / STABILIZED CONSTRUCTION ENTRANCE

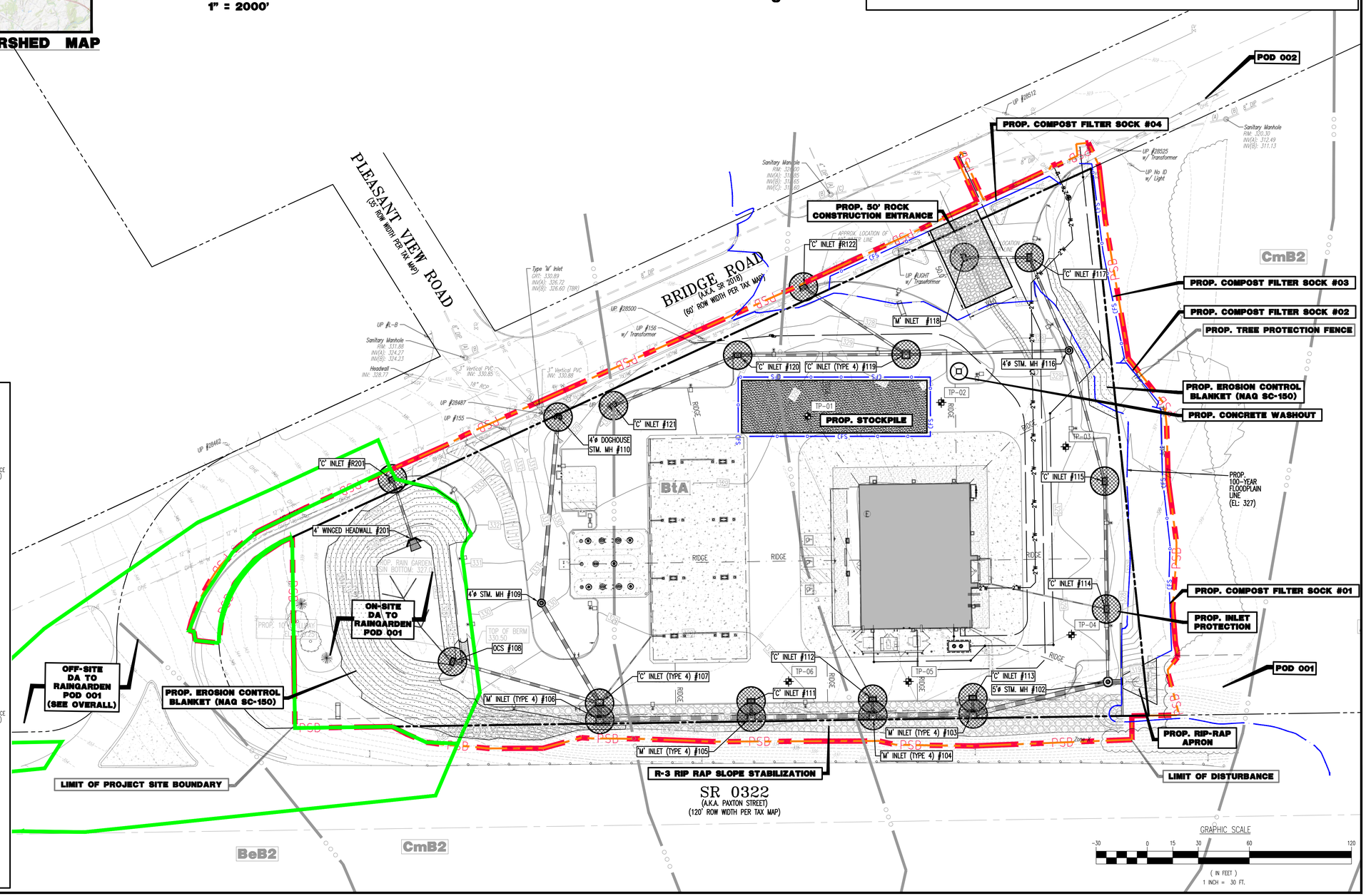

UTILITY GRAPHIC LEGEND

- EXIST. CABLE LINE
- EXIST. ELECTRIC LINE
- EXIST. FIBER OPTIC LINE
- EXIST. GAS LINE
- EXIST. OVERHEAD WIRES
- EXIST. TELEPHONE LINE
- EXIST. UNDERGROUND ELEC./TELE. SERVICE (NO. & SIZE OF CONDUITS NOT DEFINED)
- EXIST. WATER LINE
- EXIST. SANITARY SEWER LINE
- EXIST. STORM DRAIN LINE
- EXIST. UTILITY POLE
- EXIST. GUY WIRE
- EXIST. LIGHT POLE
- EXIST. BUILDING LIGHT
- EXIST. SHOE BOX LIGHT
- EXIST. COBRA LIGHT POLE
- EXIST. TRAFFIC SIGNAL POLE
- EXIST. MANHOLE
- EXIST. 'M' INLET
- EXIST. 'C' INLET
- EXIST. DOUBLE 'M' INLET
- EXIST. YARD INLET
- EXIST. FLARED END SECTION
- EXIST. HEADWALL
- PROP. CABLE LINE
- PROP. ELECTRIC LINE
- PROP. FIBER OPTIC LINE
- PROP. GAS LINE
- PROP. OVERHEAD WIRES
- PROP. TELEPHONE LINE
- PROP. UNDERGROUND ELEC./TELE. SERVICE (NO. & SIZE OF CONDUITS NOT DEFINED)
- PROP. WATER LINE
- PROP. SANITARY SEWER LINE
- PROP. STORM DRAIN LINE
- PROP. UTILITY POLE
- PROP. AREA LIGHT
- PROP. DRAINAGE MANHOLE
- PROP. 'M' INLET
- PROP. 'C' INLET
- PROP. DOUBLE 'M' INLET
- PROP. YARD INLET
- PROP. FLARED END SECTION
- PROP. HEADWALL
- PROP. OUTLET CONTROL STRUCTURE
- PROP. SANITARY SEWER MANHOLE

Plotted: 11/22/23 – 12:43 PM, By: nschechter
File: P:\DECPC PROJECTS\1478 Paramount Realty\99-212 Swatara PA\Dwg\Land Dev Plans\D1478992 12ES0.dwg, ----> 31 E&S PLAN

COPYRIGHT © 2023 – DYNAMIC ENGINEERING CONSULTANTS, PC – ALL RIGHTS RESERVED

DYNAMIC ENGINEERING CONSULTANTS, PC • SURVEY • TRAFFIC

REV.	DATE	COMMENTS	BY

EROSION & SEDIMENT CONTROL PLANS

DRAWN BY: LZ | DESIGNED BY: MS | CHECKED BY: MAW | CHECKED BY: –

PROJECT: SWATARA PAXTON DEVELOPERS LLC
PROPOSED WAWA FOOD MARKET & FUELING STATION
PARCEL NO. 63-022-037
US ROUTE 322 & BRIDGE ROAD (SR 2018)
TOWNSHIP OF SWATARA, DAUPHIN COUNTY, PENNSYLVANIA

811 Know what's below. Call before you dig.
PROTECT YOURSELF
ALL STATES REQUIRE NOTIFICATION OF EXCAVATORS, DESIGNERS, OR ANY PERSON PREPARING TO DISTURB THE EARTH'S SURFACE ANYWHERE, IN ANY STATE
FOR STATE SPECIFIC DIRECT PHONE NUMBERS VISIT: WWW.CALL811.COM

DYNAMIC ENGINEERING
LAND DEVELOPMENT CONSULTING • PERMITTING
GEOTECHNICAL • ENVIRONMENTAL
TRAFFIC • SURVEY • PLANNING & ZONING
826 Newtown Yardley Road
Suite 201, Newtown, PA 18940
T: 267.685.0276 | F: 267.685.0361
Offices conveniently located at:
Lake Como, New Jersey • T: 732.974.0198
Chanel, New Jersey • T: 908.879.9329
Midtown, New Jersey • T: 854.334.2000
Neptune, New Jersey • T: 973.735.7200
Toms River, New Jersey • T: 732.974.0198
Newtown, Pennsylvania • T: 267.685.0276
Philadelphia, Pennsylvania • T: 215.203.4888
Bethlehem, Pennsylvania • T: 610.399.4400
Allen, Texas • T: 972.334.3100
Houston, Texas • T: 281.799.4400
Austin, Texas • T: 512.644.7514
Delray Beach, Florida • T: 561.972.8370
Annapolis, Maryland • T: 410.567.3000
www.dynamicec.com

JUSTIN A. GEONNOTTI
COMMONWEALTH OF PENNSYLVANIA
PROFESSIONAL ENGINEER
PENNSYLVANIA LICENSE No. 080629

MARK A. WHITAKER
PROFESSIONAL ENGINEER
NEW JERSEY LICENSE No. 41417

TITLE: E&S PLAN

SCALE: (H) 1"=30' (V) | DATE: 11/21/2023
PROJECT No: 1478-99-212

SHEET No: 31 OF 34 | Rev. #: 0

NRCS SOIL TABLE:

DAUPHIN COUNTY SOIL SURVEY INFORMATION		
SOIL TYPE (SYMBOL)	SOIL TYPE (NAME)	HYDROLOGIC SOIL GROUP (HSG)
CmB2	CAPTINA SILT LOAM	D
BtA	BRINKERTON AND ARMAGH	D

E&S CONTROL BMP MAINTENANCE AND INSPECTION SCHEDULE §102.4(b)(5)(x):

EROSION & SEDIMENT CONTROL BMP MAINTENANCE AND INSPECTION SCHEDULE				
BMP	END OF WORK DAY	WEEKLY	AFTER STORM EVENT	AS REQUIRED
COMPOST FILTER SOCK & ROCK OUTLET FILTER		DAMAGED SOCKS OR ROCK OUTLET FILTERS SHALL BE REPAIRED ACCORDING TO MANUFACTURER'S SPECIFICATIONS OR REPLACED WITHIN 24 HOURS OF INSPECTION	DAMAGED SOCKS OR ROCK OUTLET FILTERS SHALL BE REPAIRED ACCORDING TO MANUFACTURER'S SPECIFICATIONS OR REPLACED WITH 24 HOURS OF INSPECTION	SEDIMENT SHALL BE REMOVED FROM SOCKS OR ROCK OUTLET FILTER WHEN SEDIMENT REACHES HALF OF THE HEIGHT OF THE SOCK OR 1/3 THE HEIGHT OF THE ROCK OUTLET FILTER. BIO DEGRADABLE SOCKS SHALL BE REPLACED AFTER 6 MONTHS; PHOTODEGRADABLE SOCKS AFTER ONE YEAR; OTHERS ACCORDING TO MANUFACTURER.
CONCRETE WASHOUT	INSPECTION FOR DAMAGE OR UNDERMINING			ACCUMULATED MATERIALS SHOULD BE REMOVED AT 75% CAPACITY AND PLASTIC LINERS REPLACED
ROCK CONSTRUCTION ENTRANCE	STONE THICKNESS AND FINISHED ELEVATION SHALL BE CONSTANTLY MAINTAINED TO THE SPECIFIED DIMENSIONS BY ADDING ROCK			
INLET PROTECTION		FILTER BAGS SHOULD BE CLEANED AND REPLACED WHEN BAG IS HALF FULL OR WHEN FLOW CAPACITY IS REDUCED ENOUGH TO CAUSE FLOODING	FILTER BAGS SHOULD BE CLEANED AND REPLACED WHEN BAG IS HALF FULL OR WHEN FLOW CAPACITY IS REDUCED ENOUGH TO CAUSE FLOODING	
PUMPED WATER FILTER BAGS	BAGS SHALL BE INSPECTED DAILY. IF ANY PROBLEM IS DETECTED, PUMPING SHALL CEASE IMMEDIATELY AND NOT RESUME UNTIL THE PROBLEM IS CORRECTED.			FILTER BAGS SHALL BE REPLACED WHEN THEY BECOME HALF FULL WITH SEDIMENT
E&S MATTING		MATTING SHOULD BE INSPECTED WEEKLY AND AFTER EACH RUNNOFF EVENT UNTIL PERENIAL VEGETATION IS ESTABLISHED TO A MINIMUM UNIFORM 70% COVERAGE	MATTING SHOULD BE INSPECTED WEEKLY AND AFTER EACH RUNNOFF EVENT UNTIL PERENIAL VEGETATION IS ESTABLISHED TO A MINIMUM UNIFORM 70% COVERAGE	DAMAGED OR DISPLACED BLANKETS SHALL BE RESTORED OR REPLACED WITH 4 CALENDAR DAYS
TEMPORARY SEEDING AND MULCHING		SEEDED AND MULCHED AREAS SHOULD BE INSPECTED FOR EROSION OR DISTURBANCE WEEKLY		REPLACED SEED AND MULCH IN AREAS OF DISTRUBANCE

1. ALL EROSION AND SEDIMENT CONTROL INSPECTION, MAINTENANCE AND REPAIRS SHOULD BE DOCUMENTED, THE INSPECTION LOG SHALL BE MAINTAINED AT THE SITE BY THE APPLICANT'S SITE MANAGER, LOG SHOULD BE AVAILABLE FOR REVIEW AND INSPECTION AT THE SITE AT ALL TIMES.
2. SEDIMENT REMOVED FROM BMPS SHALL BE DISPOSED OF ON-SITE IN LANDSCAPE AREAS, OUTSIDE OF STEEP SLOPES, WETLANDS, FLOODPLAINS OR DRAINAGE SWALES AND IMMEDIATELY STABILIZED OR PLACED IN SOIL STOCKPILES AND STABILIZED.

USE LIMITATIONS FOR SOIL AND GEOLOGIC FORMATIONS §102.8(f)(2):

SOIL NAME	CUTBANKS CAVE	CORROSIVE TO CONCRETE/STEEL	DROUGHTY	EASILY ERODIBLE	FLOODING	DEPTH TO SATURATED ZONE/SEASONAL HIGH WATER TABLE	HYDRIC/HYDRIC INCLUSIONS	LOW STRENGTH/ LANDSLIDE PRONE	SLOW PERCOLATION	PIPING	POOR SOURCE OF TOPSOIL	FROST ACTION	SHRINK/SWELL	POTENTIAL SINKHOLE	PONDING	WETNESS
ARMAGH	X	C/S				X	X	X	X	X	X	X	X			X
BRINKERTON	X	C/S	X	X		X	X	X	X	X	X	X	X			X

CUTBANKS CAVE:	CONTRACTOR SHALL USE CONSTRUCTION TECHNIQUES DESIGNED TO REDUCE OR ELIMINATE THE POTENTIAL FOR CUTBANK CAVING.
CORROSIVE:	SUITABLE PRECAUTIONS SHOULD BE TAKEN TO PROTECT ALL UNDERGROUND PIPES, CONDUITS AND STORAGE TANKS.
EASILY ERODIBLE:	EROSION CONTROL MEASURES SHOULD BE UTILIZED AND MONITORED UNTIL SITE STABILIZATION.
FLOODING:	CONTRACTOR SHALL PROVIDE POSITIVE DRAINAGE AT ALL AREAS.
DEPTH OF SATURATED ZONE:	CONTRACTOR SHALL UTILIZE CONSTRUCTION TECHNIQUES DESIGNED TO HANDLE ANY WATER ENCOUNTERED DURING EXCAVATION.
HYDRIC INCLUSIONS:	CONTRACTOR SHALL UTILIZE CONSTRUCTION TECHNIQUES DESIGNED TO HANDLE ANY SATURATED SOILS DURING EXCAVATION.
LOW STRENGTH:	PRECAUTIONS SHOULD BE TAKEN TO PREVENT SLOPE FAILURE DUE TO IMPROPER CONSTRUCTION TECHNIQUES SUCH AS OVER-STEEPENING AND OVERLOADING OF SLOPES, REMOVAL OF LATERAL SUPPORT AND FAILURE TO PREVENT SATURATION OF SLOPES.
SLOW PERCOLATION:	INFILTRATION TESTING PERFORMED ON-SITE YIELDED FAVORABLE PERCOLATION RATES.
PIPING:	PRECAUTIONS SHOULD BE TAKEN, AS NECESSARY, TO PREVENT PIPING.
POOR SOURCE OF TOPSOIL:	SOIL TESTS MAY BE PERFORMED TO DETERMINE APPROPRIATE TOPSOIL.
FROST ACTION:	PRECAUTIONS ARE NEEDED TO PREVENT DAMAGE, ESPECIALLY TO ROADWAYS.
SHRINK/SWELL:	STRENGTHENED FOUNDATIONS MAY BE UTILIZED IF WARRANTED BY ACTUAL SITE INVESTIGATIONS.
POTENTIAL SINKHOLES:	A SINKHOLE TREATMENT DETAIL IS PROVIDED ON THE PLAN. CONTRACTOR SHALL NOTIFY ENGINEER, TOWNSHIP AND CONSERVATION DISTRICT IMMEDIATELY IF SINKHOLES ARE ENCOUNTERED.
PONDING:	CONTRACTOR SHALL PROVIDE POSITIVE DRAINAGE AT ALL AREAS, REDUCING THE POTENTIAL FOR PONDING WATER AND WETNESS.
WETNESS:	CONTRACTOR SHALL PROVIDE POSITIVE DRAINAGE AT ALL AREAS, REDUCING THE POTENTIAL FOR PONDING WATER AND WETNESS

E&S PLANNING AND DESIGN §102.4(b)(4):

E&S PLAN MINIMIZES EXTENT AND DURATION OF EARTH DISTURBANCE
THE SEQUENCE OF CONSTRUCTION HAS BEEN DESIGNED TO ENSURE NO DISTURBED AREAS WILL UNDERGO PROLONGED TIME PERIODS OF DISTURBANCE WITHOUT STABILIZATION DURING CONSTRUCTION. ADDITIONALLY, THE LAYOUT FOR THE PROPOSED DEVELOPMENT MINIMIZES THE EXTENT OF EARTH DISTURBANCE BY MAINTAINING EXISTING DRAINAGE PATTERNS.

E&S PLAN MAXIMIZES PROTECTION OF EXISTING DRAINAGE FEATURES AND VEGETATION
THE INTENT OF THE DRAINAGE DESIGN IS TO MAINTAIN THE EXISTING PATTERNS AND DISCHARGE POINTS WHILE SATISFYING THE APPLICABLE WATER QUALITY AND STREAMBANK EROSION PROTECTION CRITERIA OF THE TOWNSHIP, COUNTY, AND PADEP.

E&S PLAN MINIMIZES SOIL COMPACTION
VEHICLES MOVEMENT, STORAGE, OR EQUIPMENT/MATERIAL LAYDOWN SHALL NOT BE PERMITTED IN AREAS WITH INFILTRATION BMPS. ONCE EXCAVATED, THE AREAS SHALL BE PROTECTED FROM VEHICULAR ACCESS. IN THE EVENT OF SOIL COMPACTION IN THESE AREAS, MEASURES ARE FURTHER OUTLINED IN THIS PLAN AND ACCOMPANYING E&S REPORT TO CORRECT THE ISSUE.

E&S PLAN UTILIZES OTHER MEASURES OR CONTROLS THAT PREVENT OR MINIMIZE GENERATION OF INCREASE STORMWATER RUNOFF
THE SITE LAYOUT WAS PREPARED TO GRADE THE SITE TO MIMIC THE EXISTING DRAINAGE PATTERNS TO THE MAXIMUM EXTENT FEASIBLE. THE STORMWATER MANAGEMENT SYSTEM HAS BEEN DESIGNED TO MEET THE RUNOFF VOLUME AND RATE REQUIREMENT CRITERIA OF THE TOWNSHIP, COUNTY, AND PADEP.

GEOLOGICAL FORMATIONS AND SOIL CONDITIONS §102.4(b)(5)(xii):

THE GEOLOGIC MAP OF PENNSYLVANIA PLACES THE SITE WITHIN THE BOUNDARIES OF THE HAMBURG SEQUENCE ROCKS (ORDOVICIAN) WHICH CONSISTS PREDOMINANTLY OF GREENISH GRAY, GRAY, PURPLE, AND MAROON SHALE, SILTSTONE, AND GRAYWAKE. ACCORDING TO THE NRCS WEB SOIL SURVEY, LARGE PORTIONS OF THE SITE ARE COMPRISED OF CAPTINA SILT LOAM WHICH IS CLASSIFIED AS HYDROLOGIC SOIL GROUP 'C/D' AND BRINKERTON AND AMRAGH WHICH IS CLASSIFIED AS HYDROLOGIC SOIL GROUP "C/D" APPENDIX 'B' OF THE SUPPLEMENTAL 'POST CONSTRUCTION STORMWATER MANAGEMENT NARRATIVE' CONTAINS MORE DETAILED SOIL MAPS AND REPORTS.

PA CHAPTER 93 CLASSIFICATION §102.8(f)(v):

1. THE PROJECT SITE IS LOCATED WITHIN THE SWATARA CREEK WATERSHED. THE WATERSHED IS ULTIMATELY TRIBUTARY TO THE SUSQUEHANNA RIVER.
2. THE SWATARA IS LOCATED APPROXIMATELY 300 FEET EAST OF THE PROPERTY BOUNDARY. SWATARA CREEK IS CLASSIFIED AS A WWF & MF (WARM WATER FISH & MIGRATORY FISH).
3. THE PROJECT SITE DOES NOT CONTAIN ANY FRESHWATER WETLANDS.

PCSM BMP DESCRIPTIONS §102.8(f)(6):

BMP ID-1: RAIN GARDEN BASIN (BMP 6.4.5) – CRITICAL STAGE

THE RAIN GARDEN HAS BEEN PROPOSED ON-SITE, STORMWATER RUNOFF FROM OFF-SITE DRAINAGE AREAS IS COLLECTED IN THE BASIN AND SLOWLY BYPASSED AND PROMOTES EVAPOTRANSPIRATION OF THE CAPTURE RUNOFF, DESIGN ELEMENTS INCORPORATED INTO THE RAIN GARDEN BASIN INCLUDE THE FOLLOWING:

1. UNCOMPACTED SUB-GRADE
2. ERNMX-183 RAIN GARDEN SEED MIX
3. PROVIDES POSITIVE STORMWATER OVERFLOW THROUGH ENGINEERED OUTLET STRUCTURE.
4. NOT INSTALLED ON RECENTLY PLACED FILL (<5 YEARS)
5. MAINTAINS A MINIMUM 2-FOOT SEPARATION TO SEASONALLY HIGH WATER TABLE.

BMP ID-2: RE-VEGETATE AND RE-FOREST DISTURBED AREAS (BMP 5.6.3)

RE-VEGETATION OF DISTURBED AREAS HAS BEEN PROPOSED IN AREAS OF THE DISTURBED SOILS PROPOSED TO BE LANDSCAPED AREAS THROUGHOUT THE SITE. SOME OF THE DESIGN CONSIDERATIONS ARE AS FOLLOWS:

- EXISTING HIGH-QUALITY PLANT MATERIALS AND SOIL MANTLE SHALL BE PRESERVED WHEREVER POSSIBLE. COMPACTION WILL BE REDUCED THROUGH THE USE OF PROPER CONSTRUCTION SEQUENCES AND, WHERE SOILS ARE FOUND TO BE OVERLY COMPACTED DURING CONSTRUCTION SOIL AMENDMENTS WILL BE PERFORMED TO HELP RESTORE THE NATURAL INFILTRATION CAPACITY.
- THE PROJECT PROPOSES TO USE NATIVE SPECIES FOR LANDSCAPING AND RE-VEGETATION THAT DO NOT REQUIRE SIGNIFICANT CHEMICAL MAINTENANCE BY FERTILIZERS, HERBICIDES, AND PESTICIDES. THE CONTRACTOR SHALL USE THE WARM SEASON GRASSES SEED MIX SPECIFICATIONS PROVIDED WITHIN THE PERMANENT SEEDING NOTES. THE MIX CONTAINS PERENNIAL WARM SEASON GRASSES (WHICH TAKE 1-2 YEARS TO ESTABLISH) COMBINED WITH COOL SEASON GRAIN TO PROVIDE IMMEDIATE COVER AND AS A COMPANION CROP.THE GRAIN MATURES QUICKLY DURING THE COOL WET SEASON AND GOES DORMANT DURING A HOT DRY PERIOD, WHICH ALLOWS THE NATIVE GRASSES TO DEVELOP INTO LONG-TERM GRASS COVER.

PERMANENT SEEDING NOTES:

A. PERMANENT SEEDING SHALL OCCUR IMMEDIATELY AFTER THE FINAL GRADING IS COMPLETED. THE FOLLOWING SEED SHALL BE PLACED IN ALL LAWN AREAS, EXCEPT FOR INFILTRATION BASIN AREAS, UNLESS OTHERWISE SPECIFIED ON THE PLANS OR DIRECTED IN THE FIELD:
B. GENERAL SITE SEED MIX SPECIFICATIONS:
   - SPECIES – KENTUCKY 31 TALL FESCUE (88%) AND REDTOP (12%)
   - % PURE LIVE SEED – 76%
   - APPLICATION RATE – 87 LBS PER ACRE
   - FERTILIZER TYPE – 10-20-20
   - FERTILIZER APPLICATION RATE – 1000 LBS PER ACRE
   - LIME RATE – 6 TON PER ACRE
   - MULCHING TYPE – HAY/STRAW
   - MULCHING TYPE – 3 TONS PER ACRE
   - ANCHORING MATERIAL – WOOD CELLULOSE
   - ANCHORING METHOD – HYDROSEED
   - RATE OF ANCHORING MATERIAL APPLICATION – 160 LBS PER 1000 SY
   - SEEDING SEASON DATES – APRIL 1 TO JUNE 15; JULY 25 TO SEPTEMBER 15
C. BMP-1: RAIN GARDEN BASIN SEED MIX SPECIFICATIONS:
   THE RAIN GARDEN BOTTOMS SHALL BE SEEDED WITH ERNST #183, DETENTION BASIN WILDLIFE MIX (OR APPROVED EQUAL). THE SEED MIX COMPOSITION SHALL CONSIST OF:
   - 26.0% PANICUM CLANDESTINUM, 'TIOGA' (DEERTONGUE, 'TIOGA')
   - 25.0% PANICUM VIRGATUM, 'CARTHAGE', NC ECOTYPE (SWITCHGRASS, CARTHAGE, NC ECOTYPE)
   - 22.0% POA PALUSTRIS (FOWL BLUEGRASS)
   - 20.0% CAREX VULPINOIDEA, PA ECOTYPE (FOX SEDGE, PA ECOTYPE)
   - 20.0% ELYMUS VIRGINICUS, MADISON-NY ECOTYPE (VIRGINIA WILDRYE, MADISON-NY ECOTYPE)
   - 4.0% AGROSTIS PERENNAS, ALBANY PINE BRUSH-NY ECOTYPE (AUTUMN BENTGRASS, ALBANY PINE BRUSH-NY ECOTYPE)
   - 3.0% JUNCUS EFFUSUS (SOFT RUSH)
   - 1.0% JUNCUS TENUIS, PA ECOTYPE (PATH RUSH, PA ECOTYPE)
   - 1.0% PANICUM RIGIDULUM, PA ECOTYPE (REDTOP PANICGRASS, PA ECOTYPE)
D. USE ONLY SEED WITH GERMINATION RATE OF 70% OR BETTER THAT HAS BEEN TESTED WITHIN THE PAST 4 OR 5 MONTHS.
E. AREAS WHICH ARE TO BE TOPSOILED SHALL BE SCARIFIED TO A MINIMUM DEPTH OF 3 TO 5 INCHES -- 6 TO 12 INCHES ON COMPACTED SOILS -- PRIOR TO PLACEMENT OF TOPSOIL. AREAS TO BE VEGETATED SHALL HAVE A MINIMUM 4 INCHES OF TOPSOIL IN PLACE PRIOR TO SEEDING AND MULCHING. FILL OUTSLOPES SHALL HAVE A MINIMUM OF 2 INCHES OF TOPSOIL.
F. REMOVE ALL DEBRIS, INCLUDING LARGE STONES. APPLY LIME AND FERTILIZER AT THE RATE SPECIFIED. WORK FERTILIZER INTO TOP INCH OF SOIL.
G. APPLY SEED AT THE RATE SPECIFIED. DIVIDE SEED INTO TWO EQUAL LOTS. SOW ONE LOT IN ONE DIRECTION. SOW SECOND LOT AT RIGHT ANGLE TO FIRST LOT. RAKE SEEDED AREA SLIGHTLY. ROLL SURFACE LIGHTLY TO FIRM SOIL AROUND SEED.
H. MULCH SEEDED AREAS WITH STRAW OR HAY AT THE RATE SPECIFIED. COMPLY WITH THE REQUIREMENTS OF SECTION 805 MULCHING, PENNDOT PUBLICATION 408. ANCHOR MULCH AS SPECIFIED.
I. SOW ABOVE MIX AT A RATE OF 20 LBS./ACRE OR 1/2 LB PER 1,000 S.F.
J. SUPPLEMENT ABOVE MIX WITH A COVER CROP OF GRAIN RYE AT 30 LBS/ACRE (SEP 1 TO APR 30) OR JAPANESE MILLET AT 10LBS/ACRE (MAY 1 TO AUG 31).
K. MOW SEEDED AREA ONCE PER YEAR IN LATE SPRING.

POLLUTION PREVENTION MEASURES:

POLLUTION PREVENTION MEASURES SHALL BE UTILIZED TO PREVENT CONSTRUCTION MATERIALS WITH THE POTENTIAL OF POLLUTING STORMWATER, SUCH AS THOSE LISTED ABOVE, FROM COMING IN CONTACT WITH RUNOFF. MEASURES INCLUDE GOOD HOUSEKEEPING AND PROPER DISPOSAL OF CONSTRUCTION AND DEMOLITION DEBRIS, EQUIPMENT FUEL, LUBRICANTS, PAINTS AND SOLVENTS, ASPHALT, CONCRETE, TOPSOIL AND OTHER MATERIALS, AS WELL AS CONTROLS WHICH PREVENT SEDIMENTS FROM BEING TRACKED OFF-SITE BY CONSTRUCTION VEHICLES, AND PROPER CONTROL OF ANY NON-STORMWATER FLOWS ON-SITE.

BMPS
BMPS FOR CONSTRUCTION WASTE:

- SELECT A DESIGNATED WASTE COLLECTION AREA ON-SITE.
- PROVIDE AN ADEQUATE NUMBER OF CONTAINERS WITH LIDS OR COVERS THAT CAN BE PLACED OVER THE CONTAINERS PRIOR TO RAINFALL.
- WHEN POSSIBLE, LOCATE CONTAINERS IN A COVERED AREA.
- ARRANGE FOR WASTE COLLECTION BEFORE CONTAINERS OVERFLOW.
- IF A CONTAINER DOES SPILL, PROVIDE CLEANUP IMMEDIATELY.
- PLAN FOR ADDITIONAL CONTAINERS AND MORE FREQUENT PICKUPS DURING THE DEMOLITION PHASE OF CONSTRUCTION.
- MAKE SURE THAT CONSTRUCTION WASTE IS COLLECTED, REMOVED, AND DISPOSED OF ONLY AT AUTHORIZED DISPOSAL AREAS.
- CHECK WITH LOCAL SOLID WASTE MANAGEMENT AGENCY FOR SPECIFIC GUIDANCE.

BMPS FOR HAZARDOUS WASTES DISPOSAL:

- CHECK WITH LOCAL WASTE MANAGEMENT AUTHORITIES TO DETERMINE WHAT THE REQUIREMENTS ARE FOR DISPOSING OF HAZARDOUS MATERIALS.
- USE THE ENTIRE PRODUCT BEFORE DISPOSING OF THE CONTAINER.
- DO NOT REMOVE THE ORIGINAL PRODUCT LABEL FROM THE CONTAINER. IT CONTAINS IMPORTANT INFORMATION.
- DO NOT MIX PRODUCTS TOGETHER UNLESS SPECIFICALLY RECOMMENDED BY THE MANUFACTURER.
- THE CORRECT DISPOSAL OF THESE PRODUCTS VARIES WITH THE PRODUCT UTILIZED. FOLLOW THE MANUFACTURERS RECOMMENDED METHOD, WHICH IS OFTEN FOUND ON THE LABEL.

BMPS FOR HAZARDOUS PRODUCTS MANAGEMENT:

- HAVE EQUIPMENT TO CONTAIN AND CLEAN UP SPILLS OF HAZARDOUS MATERIALS IN THE VICINITY OF WHERE THESE MATERIALS ARE TO BE STORED OR USED.
- CONTAIN AND CLEAN UP SPILLS IMMEDIATELY AFTER THEY OCCUR. CONTACT STATE OR LOCAL SOLID WASTE REGULATORY AGENCY CONCERNING INFORMATION AND PROCEDURES NECESSARY TO TREAT OR DISPOSE OF CONTAMINATED SOILS.
- KEEP MATERIALS IN A DRY COVERED AREA AND ELEVATED FROM THE GROUND.

BMPS FOR RESIDUAL CONCRETE DISPOSAL:

- EMPTYING OR WASH OUT OF EXCESS CONCRETE MAY BE ALLOWED ON-SITE. EXCESS CONCRETE AND WASH WATER SHOULD BE DISPOSED OF IN A MANNER THAT PREVENTS CONTACT BETWEEN THESE MATERIALS AND STORMWATER DISCHARGES FROM THE SITE.
- RESIDUAL CONCRETE SHALL BE DISCHARGED IN SPECIFICALLY DESIGNATED DIKE AREAS, WHICH HAVE BEEN PREPARED TO PREVENT CONTACT BETWEEN THE CONCRETE AND/OR WASHOUT AND STORMWATER DISCHARGED FROM THE SITE.
- THE HARDENED RESIDUE FROM THE DIKE AREAS SHALL BE DISPOSED OF IN THE SAME MANNER AS OTHER NON-HAZARDOUS CONSTRUCTION WASTE MATERIALS OR MAY BE BROKEN UP AND UTILIZED AS DEEMED APPROPRIATE BY THE CONTRACTOR.

BMPS FOR SANITARY/SEPTIC WASTES:

- SANITARY OR SEPTIC WASTES THAT ARE GENERATED ON-SITE SHOULD BE TREATED OR DISPOSED OF IN ACCORDANCE WITH STATE OR LOCAL REQUIREMENTS.
- IF SELF-CONTAINED, TEMPORARY FACILITIES ARE UTILIZED, THE DOMESTIC WASTE HAULERS SHOULD BE CONTRACTED TO REGULARLY REMOVE THE SANITARY AND SEPTIC WASTES AND TO MAINTAIN THE FACILITIES IN GOOD WORKING ORDER.
- ANY FACILITIES TO BE CONNECTED TO A SANITARY SEWER SYSTEM SHOULD BE PROPERLY CONNECTED TO THE SANITARY SEWER SYSTEM TO PREVENT ILLICIT DISCHARGES.
- UNTREATED, RAW SEWAGE SHOULD NEVER BE DISCHARGED OR BURIED ON-SITE.
- CONTACT LOCAL GOVERNMENT AND STATE REGULATORY AGENCIES TO ENSURE COMPLIANCE WITH STATE OR LOCAL REQUIREMENTS.
- IF SEWAGE IS BEING DISCHARGED TO A PUBLIC SANITARY SEWER SYSTEM, THE LOCAL SEWER AUTHORITY SHOULD BE CONTACTED.

BMPS FOR PESTICIDES:

- STORE PESTICIDES IN A DRY COVERED AREA AND ELEVATE ABOVE THE GROUND.
- PROVIDE CURBS OR DIKES TO CONTAIN POSSIBLE SPILLS.
- HAVE MEASURES ON-SITE TO CONTAIN AND CLEAN UP SPILLS.
- STRICTLY FOLLOW RECOMMENDED APPLICATION RATES AND RECOMMENDED APPLICATION METHODS.
- ONLY A CERTIFIED APPLICATOR SHALL USE PESTICIDES.

BMPS FOR PETROLEUM PRODUCTS:

- FUELING OPERATIONS SHALL OCCUR IN A DESIGNATED AREA.
- HAVE EQUIPMENT TO CONTAIN AND CLEAN UP PETROLEUM SPILLS IN FUEL STORAGE AREAS OR ON MAINTENANCE AND FUELING VEHICLES.
- WHERE POSSIBLE, STORE PETROLEUM PRODUCTS AND FUEL VEHICLES IN COVERED AREAS AND CONSTRUCT DIKES TO CONTAIN SPILLS.
- CONTAIN AND CLEAN UP SPILLS IMMEDIATELY.
- USE PREVENTATIVE MAINTENANCE FOR ON-SITE EQUIPMENT SUCH AS CHECKING FOR AND FIXING GAS AND OIL LEAKS IN CONSTRUCTION VEHICLES ON A REGULAR BASIS.
- FOLLOW PROPER PROCEDURE FOR THE HANDLING AND APPLICATION OF ASPHALTIC SUBSTANCES.
- OVERSEE ALL FILLING OPERATIONS.
- FUELING EQUIPMENT AND AREA SHALL BE FENCED AND VALVING LOCKED TO PREVENT VANDALISM.

BMPS FOR FERTILIZERS/DETERGENTS:

- LIMIT THE APPLICATION OF FERTILIZERS TO THE MINIMUM AREA AND MINIMUM RECOMMENDED AMOUNTS.
- REDUCE EXPOSURE OF NUTRIENTS TO STORMWATER RUNOFF BY WORKING THE FERTILIZER DEEP INTO THE SOIL.
- APPLY FERTILIZER MORE FREQUENTLY, BUT AT LOWER APPLICATION RATES.
- HYDRO-SEEDING, WHERE LIME AND FERTILIZERS ARE APPLIED TO THE GROUND SURFACE IN ONE APPLICATION SHOULD BE LIMITED, WHERE POSSIBLE.
- LIMIT THE USE OF DETERGENTS ON-SITE: WASH WATER CONTAINING DETERGENTS SHOULD NOT BE DISCHARGED TO THE STORM SYSTEM.
- IMPLEMENT EROSION AND SEDIMENT CONTROL PRACTICES TO HELP REDUCE THE AMOUNT OF FERTILIZERS THAT CAN LEAVE THE SITE, AS WELL AS SEDIMENTS.
- FERTILIZERS AND DETERGENTS SHALL BE STORED IN DRY AND COVERED AREAS AND ELEVATED ABOVE THE GROUND.
- BERMING SHALL BE PROVIDED AROUND THE STORAGE AREA TO AVOID CONTACT WITH STORMWATER RUNOFF.

SPILL MANAGEMENT

CONSTRUCTION SITE SUPERVISORS SHOULD CREATE AND ADOPT A SPILL CONTROL PLAN THAT INCLUDES MEASURES AND PROCEDURES TO STOP THE SOURCE OF THE SPILL, CONTAIN THE SPILL, CLEAN UP, AND DISPOSAL OF CONTAMINATED MATERIALS. KEY PERSONNEL SHALL BE IDENTIFIED AND TRAINED TO BE RESPONSIBLE FOR SPILL PREVENTION AND CONTROL. THE FOLLOWING MEASURES WOULD BE APPROPRIATE FOR A SPILL PREVENTION AND RESPONSE PLAN:

- STORE AND HANDLE MATERIALS TO PREVENT SPILL.
  - TIGHTLY SEAL CONTAINERS.
  - MAKE SURE ALL CONTAINERS ARE CLEARLY LABELED.
  - STACK CONTAINERS NEATLY AND SECURELY.
  - WHERE POSSIBLE, STORE CONTAINERS ON PALLETS IN A COVERED AREA.
- REDUCE STORMWATER CONTACT IF THERE IS A SPILL.
  - HAVE CLEANUP PROCEDURES CLEARLY POSTED.
  - HAVE CLEANUP MATERIALS READILY AVAILABLE.
  - CONTAIN ANY LIQUID.
  - STOP THE SOURCE OF THE SPILL.
  - COVER SPILL WITH ABSORBENT MATERIAL.
- DISPOSE OF CONTAMINATED MATERIALS ACCORDING TO MANUFACTURER'S INSTRUCTIONS OR ACCORDING TO STATE OR LOCAL REQUIREMENTS.
- IDENTIFY PERSONNEL RESPONSIBLE FOR RESPONDING TO A SPILL OF TOXIC OR HAZARDOUS MATERIALS.
  - PROVIDE PERSONNEL SPILL RESPONSE TRAINING.
  - POST NAMES OF SPILL RESPONSE PERSONNEL.
- KEEP THE SPILL AREA WELL VENTILATED.
- IF NECESSARY, USE A PRIVATE FIRM THAT SPECIALIZES IN CLEANUP.

ADDITIONALLY, RECORDS OF SPILLS, LEAKS OR OVERFLOWS THAT RESULT IN THE DISCHARGE OF POLLUTANTS MUST BE DOCUMENTED AND MAINTAINED. INFORMATION SUCH AS THE TIME AND DATE, WEATHER CONDITIONS, REASONS FOR THE SPILL, ETC., SHALL BE RECORDED FOR ALL OCCURRENCES. SOME SPILLS MAY NEED TO BE REPORTED TO THE DEPARTMENT OF ENVIRONMENTAL PROTECTION IMMEDIATELY. SPECIFICALLY, A RELEASE OF ANY CHEMICAL, OIL, PETROLEUM PRODUCT, SEWAGE, ETC., WHICH MAY ENTER WATERS OF THE STATE OF PENNSYLVANIA (WHICH INCLUDE SURFACE WATER, GROUND WATER AND DRY GULLIES OR STORM SEWERS LEADING TO SURFACE WATER) MUST BE REPORTED.

RECYCLING AND DISPOSAL OF MATERIALS §102.4(b)(5)(xi):

ALL BUILDING MATERIALS AND WASTES MUST BE REMOVED FROM THE SITE AND RECYCLED OR DISPOSED OF IN ACCORDANCE WITH THE DEPARTMENT'S SOLID WASTE MANAGEMENT REGULATIONS AT 25 PA CODE 260.1 ET SEQ., 271.1., AND 287.1 ET SEQ. NO BUILDING MATERIALS OR WASTES OR UNUSED BUILDING MATERIALS SHALL BE BURNED, BURIED, DUMPED OR DISCHARGED AT THE SITE.

THE FOLLOWING INFORMATION RELATIVE TO MATERIAL RECYCLING & DISPOSAL, AND FILL IS PROVIDED FOR THE SOLE PURPOSE OF GUIDANCE ONLY. COMPLIANCE WITH THESE GUIDELINES DOES NOT IMPLY OR PROVIDE ANY WARRANTY FOR ANY RELEASE OF LIABILITY FROM LOCAL, STATE OR FEDERAL REQUIREMENTS, REGULATIONS, AND/OR STATUTES; AND/OR DOES NOT IMPLY OR PROVIDE ANY WARRANTY FOR ANY RELEASE FROM COMPLIANCE WITH OBLIGATIONS AS MAY BE SET FORTH BY CONTRACTUAL SPECIFICATIONS AND GUIDELINES. SITE OPERATORS ARE THE CONTRACTOR, SUB-CONTRACTOR, PROPERTY OWNER, DEVELOPER AND/OR PERSON IN RESPONSIBLE CHARGE OF OVERALL SITE WORKS AND IMPLEMENTATION OF EROSION AND SEDIMENT CONTROL BMP'S.

WASTE MANAGEMENT:

1. BUILDING MATERIALS AND OTHER CONSTRUCTION SITE WASTES MUST BE PROPERLY MANAGED AND DISPOSED OF TO REDUCE POTENTIAL FOR POLLUTION TO SURFACE AND GROUND WATERS AS PER 25 PA. CODE §102.4(B)(5)(XI). PROPER TRASH DISPOSAL, RECYCLING OF MATERIALS, PROPER MATERIALS HANDLING, AND SPILL PREVENTION AND CLEAN-UP REDUCE THE POTENTIAL FOR CONSTRUCTION SITE WASTES TO BE MOBILIZED BY STORMWATER RUNOFF AND CONVEYED TO SURFACE WATERS.
2. TREES, STUMPS & BRUSH: CLEARING WASTE SHALL NOT BE BURIED OR BURNED. SUCH MATERIALS SHALL BE GROUND AND USED AS MULCH OR HAULED TO A MULCH RECYCLING FACILITY.
3. CEMENT CONCRETE WASTE MATERIAL: CEMENT CONCRETE WASTE MATERIALS MAY BE CRUSHED AND USED AS FILL WHEN POSSIBLE.
4. BITUMINOUS CONCRETE AND PAVING WASTE MATERIAL: SUCH MATERIALS SHALL NOT BE BURIED IN BULK ON-SITE. BITUMINOUS PAVING WASTES MAY BE CRUSHED/MILLED AND MIXED WITH AGGREGATE MATERIALS USED FOR CONSTRUCTION OF SIDEWALKS OR PARKING AREAS OUTSIDE OF PUBLIC RIGHT-OF-WAY; OR HAULED TO A FACILITY EQUIPPED TO RECYCLE SUCH MATERIAL. BITUMINOUS MATERIALS SUCH AS PAVEMENT SEALER, ROOFING MATERIAL, ETC. MUST BE DISPOSED OF AS BUILDING WASTE MATERIAL.
5. ROCK WASTE: ALL ROCK THAT IS SUITABLE FOR LANDSCAPING PURPOSES MAY BE UTILIZED ON-SITE OR AT ANOTHER FACILITY. ROCK MAY ALSO BE CRUSHED AND UTILIZED AS AGGREGATE CONSTRUCTION MATERIAL PROVIDED IT MEETS REQUIRED SPECIFICATIONS FOR SUCH USE, AND IS APPROVED FOR USE BY THE MUNICIPALITY AN/OR PENNDOT. ROCK MAY ONLY BE BURIED ON-SITE PROVIDED THE DISPOSAL PIT IS LOCATED OUTSIDE OF PUBLIC RIGHT-OF-WAY AND ANY EASEMENTS; AND PROVIDED THE EXCAVATION, PLACEMENT AND BACKFILLING IS ACCOMPLISHED IN SUCH A MANNER THAT VOIDING IS ELIMINATED.
6. SOIL WASTE: ALL EXCAVATED CLEAN FILL SOILS MAY BE UTILIZED ON-SITE AS FILL MATERIAL. EXCESS MATERIAL REMOVED FROM THE SITE MAY ONLY BE DISPOSED OF AT AN OFF-SITE LOCATION THAT HAS AN APPROVED NPDES PERMIT (WHERE APPLICATE); AN EROSION CONTROL PLAN APPROVED BY THE COUNTY CONSERVATION DISTRICT; AND WHERE ALL APPLICABLE EROSION CONTROL BMPS HAVE BEEN PROPERLY INSTALLED AND IMPLEMENTED.
7. BMP SEDIMENT DISPOSAL: SEDIMENT REMOVED FROM BMPS SHALL BE DISPOSED OF IN LANDSCAPED AREAS OUTSIDE OF STEEP SLOPES, WETLANDS, FLOOD PLAINS OR DRAINAGE SWALES AND IMMEDIATELY STABILIZED; OR PLACED IN TOPSOIL STOCKPILES.
   a. LANDSCAPED AREAS SHALL BE UPLAND AREAS OUTSIDE OF ALL OTHER REGULATED WATERS OF THE COMMONWEALTH OF PA, AND ALL OTHER REGULATED WATERS OF THE UNITED STATED.
   b. DOWNGRADE PERIMETER OF THE LANDSCAPED AREAS SHALL BE PROTECTED WITH SILT FENCE.
   c. SEDIMENTS USED AS A TOPSOIL COVER IN LANDSCAPED AREAS, SHALL BE EVENLY SPREAD OVER THE DISPOSAL AREA.
   d. IF THE LANDSCAPED AREA GRADING IS TEMPORARY, AREA SHALL BE IMMEDIATELY STABILIZED IN ACCORDANCE WITH TEMPORARY (INTERIM) REQUIREMENTS.
   e. IF THE LANDSCAPED AREA GRADING IS PERMANENT, AREAL SHALL BE IMMEDIATELY STABILIZED IN ACCORDANCE WITH PERMANENT (FINAL) REQUIREMENTS.
   f. WHEN THE LANDSCAPED AREA HAS 70% UNIFORM PERENNIAL VEGETATIVE COVER OF SUFFICIENT DENSITY TO RESIST ACCELERATE EROSION, ALL TEMPORARY EROSION CONTROL WILL BE REMOVED, AND DISPOSED OF PROPERLY.
8. EXCESS SEDIMENT AND/OR SOILS MATERIAL REMOVED FROM THE SITE MAY ONLY BE DISPOSED OF AT AN OFF-SITE LOCATION THAT HAS AN APPROVED NPDES PERMIT (WHERE APPLICABLE); AN EROSION CONTROL PLAN APPROVED BY THE COUNTY CONSERVATION DISTRICT; AND WHERE ALL APPLICABLE EROSION CONTROL BMPS HAVE BEEN PROPERLY INSTALLED AND IMPLEMENTED.

SEQUENCE OF CONSTRUCTION §102.4(b)(5)(vii):

NOTES:
A. AT LEAST 7 DAYS PRIOR TO STARTING ANY EARTH DISTURBANCE ACTIVITIES (INCLUDING CLEARING AND GRUBBING), THE APPLICANT SHALL COORDINATE AN ON-SITE PRE-CONSTRUCTION MEETING WITH THE DAUPHIN COUNTY CONSERVATION DISTRICT (DCCD), APPROPRIATE MUNICIPAL OFFICIALS FROM SWATARA TOWNSHIP, PROPERTY OWNER AND/OR DEVELOPMENT REPRESENTATIVE, DESIGN ENGINEER (DECPC) AND ALL CONTRACTORS.
B. AT LEAST 3 DAYS PRIOR TO STARTING ANY EARTH DISTURBANCE ACTIVITIES, OR EXPANDING INTO AN AREA PREVIOUSLY UNMARKED, THE PENNSYLVANIA ONE CALL SYSTEM INC. SHALL BE NOTIFIED AT 1-800-242-1776 FOR THE LOCATION OF EXISTING UNDERGROUND UTILITIES.
C. EACH STAGE OF THE SEQUENCE OF CONSTRUCTION MUST BE COMPLETED PRIOR TO INITIATION OF THE NEXT STAGE OF THE SEQUENCE OF CONSTRUCTION. CONSTRUCTION ACTIVITIES WITHIN EACH STATE MAY OVERLAP PROVIDED THAT WORK WITHIN EACH AREA IS CARRIED OUT IN SEQUENCE.
D. THE CONTRACTOR IS ADVISED TO FULLY REVIEW THE SEQUENCE OF CONSTRUCTION TO ENSURE PROPER SEQUENCING CAN BE MAINTAINED WITH THE ANTICIPATED CONTRACTOR WORK METHODS. SHOULD THE CONTRACTOR FEEL THAT MODIFICATIONS ARE REQUIRED/DESIRED, THEY SHALL PROVIDE A MODIFIED SEQUENCE IN WRITING TO THE CONSERVATION DISTRICT FOR APPROVAL.
E. IMMEDIATELY UPON DISCOVERING UNFORESEEN CIRCUMSTANCES POSTING THE POTENTIAL FOR ACCELERATED SOIL EROSION AND/OR SEDIMENT POLLUTION, THE OPERATOR SHALL IMPLEMENT APPROPRIATE BEST MANAGEMENT PRACTICES TO ELIMINATE THE POTENTIAL FOR ACCELERATED EROSION AND/OR SEDIMENT POLLUTION AND NOTIFY THE DCCD.
F. THE OPERATOR SHALL REMOVE FROM THE SITE, RECYCLE OR DISPOSE OF ALL BUILDING MATERIALS AND WASTES IN ACCORDANCE WITH THE DEPARTMENT'S SOLID WASTE MANAGEMENT REGULATIONS AT 25 PA CODE 260.1 ET SEQ. 271. E. SEQ. AND 287.1 SEQ.
G. BEFORE DISPOSING OF SOIL OR RECEIVING BORROW FOR THE SITE, THE OPERATOR MUST ASSURE THAT EACH SPOIL OR BORROW AREA HAS AN EROSION AND SEDIMENT CONTROL PLAN APPROVED BY THE PENNSYLVANIA DEPARTMENT OF ENVIRONMENTAL PROTECTION AND WHICH IS BEING IMPLEMENTED AND MAINTAINED ACCORDING TO CHAPTER 102 REGULATIONS.
H. ALL BLASTING ACTIVITY, IF REQUIRED, SHOULD BE DONE IN ACCORDANCE WITH THE LOCAL, STATE AND FEDERAL REGULATIONS. CONTRACTOR SHOULD NOTIFY OWNER AND ALL REGULATOR AGENCIES IN WRITING PRIOR AND OBTAIN ANY NECESSARY PERMITS PROPER TO ANY BLASTING ACTIVITIES.

1. THE LIMIT OF DISTURBANCE AND ANY SENSITIVE ON-SITE AREAS (STREAMS, WETLANDS, ETC.) SHALL BE PROPERLY MARKED PRIOR TO DISTURBANCE ACTIVITIES OR INSTALLATION OF E&S BMPS.
2. INSTALL CONSTRUCTION ENTRANCES AS PER STANDARDS ON DRAWINGS. ALL CONSTRUCTION TRAFFIC SHOULD USE ONLY THESE AREAS FOR INGRESS AND EGRESS. AS CONDITIONS WARRANT, THE LOCATION MAY BE MODIFIED WITH THE PROPER APPROVAL FROM DCCD. A CLEAN STONE STOCKPILE SHALL BE MAINTAINED ADJACENT TO THE CONSTRUCTION ENTRANCES.
3. SEDIMENT TRACKED ONTO ANY PUBLIC ROADWAY, OR SIDEWALK SHALL BE RETURNED TO CONSTRUCTION SITE BY THE END OF THE EACH WORK DAY (OR MORE OFTEN AS NEEDED TO KEEP THE ROAD CLEAN) AND DISPOSED IN THE MANNER DESCRIBED IN THIS PLAN, IN NO CASE SHALL THE SEDIMENT BE WASHED, SHOVELED, OR SWEPT INTO ANY ROADSIDE DITCH, STORM SEWER, OR SURFACE WATER.
4. INSTALL COMPOST FILTER SOCK AND CONSTRUCTION FENCE IN THE LOCATIONS SHOWN ON THE EROSION AND SEDIMENT CONTROL (E&S) PLAN. INITIAL CLEARING AND GRUBING SHOULD BE LIMITED TO THAT WHICH IS NECESSARY TO CONSTRUCT THE PROPOSED PERIMETER BMPS.
5. IF NEEDED, ADDITIONAL COMPOST FILTER SOCKS MAY NEED TO BE INSTALLED IN AREAS OF EXCESSIVE SEDIMENT RUNOFF DURING CONSTRUCTION.
6. INSTALL INLET PROTECTION ON ALL EXISTING INLETS IN THE LOCATIONS SHOWN ON THE PLAN.
7. PRIOR TO ANY CONCRETE BEING POURED, THE CONTRACTOR SHALL INSTALL THE PROPOSED CONCRETE WASHOUTS.
8. HAVE A QUALIFIED PROFESSIONAL CONDUCT AN ASSESSMENT OF THE SITE PRIOR TO THE COMMENCEMENT OF CONSTRUCTION.
9. UPON THE INSTALLATION OR STABILIZATION OF ALL PERIMETER SEDIMENT CONTROL BMPS AND AT LEAST 3 DAYS PRIOR TO PROCEEDING WITH THE BULK EARTH DISTURBANCE ACTIVITIES, THE PERMITTEE OR CO-PERMITTEE SHALL PROVIDE NOTIFICATION TO THE DEPARTMENT OR AUTHORIZED CONSERVATION DISTRICT.
10. MARK LIMITS OF DEMOLITION. LIMITS OF DEMOLITION ARE GRADUAL BASED UPON CONSTRUCTION PROGRESS. THE GOAL IS TO PRESERVE EXISTING IMPROVED, STABILIZED SURFACES AND FEATURES.
11. CONTRACTOR TO MAINTAIN EXISTING BYPASS DRAINAGE INLETS AND PIPING AT TOE OF SLOPE ALONG SR 322 (PAXTON STREET) SOUTHERN PROPERTY FRONTAGE FOR THE DURATION OF BULK DEMOLITION AND EARTHWORK MOVING ACTIVITES DURING INITIAL STAGES OF CONSTRUCTION. ONCE CONSTRUCTION HAS COMMENCED TO THE POINT THAT THE STORM INFRASTRUCTURE IS TO BE REMOVED, CONTRACTOR SHALL TARGET DRY WEATHER FOR REMOVAL OF EXISTING BYPASS INLETS AND PIPING AND INSTALL STORM STRUCTURES 108 TO 102 FOR BYPASS OF OFF-SITE STORMWATER FLOWS. R-3 RIP RAP SLOPE REINFORCEMENT TO BE INSTALLED TO PREVENT EROSION OF STEEP SLOPE AREAS AT TOE OF SLOPE OF SR 322 RIGHT OF WAY. AREAS TRIBUTARY TO THE RAIN GARDEN BASIN AREA SHALL BE STABILIZED AND PROTECTED FROM SEDIMENT ACCUMULATION DURING INSTALLATION OF BYPASS STORM SYSTEM.
12. ONCE CONSTRUCTION ACTIVITIES HAVE COMMENCED, IMMEDIATE STABILIZATION IS REQUIRED UPON CESSATION OF WORK – 4 DAYS OR MORE – OR AS SOON AS GRADED AREA REACHES FINAL GRADE. WAITING FOR AN ENTIRE PHASE TO REACH FINAL GRADE BEFORE SEEDING AND MULCHING TAKES PLACE IS NOT ACCEPTABLE.
13. WHEN FINAL GRADE IS ACHIEVED DURING NON-GERMINATING MONTHS, THE AREA SHOULD BE MULCHED UNTIL THE BEGINNING OF THE NEXT PLANTING SEASON (APRIL 1 TO JUNE 15' JULY 25 TO SEPTEMBER 15).
14. IN NO CASE SHOULD AN AREA EXCEEDING 15,000 SQUARE FEET, WHICH IS TO BE STABILIZED BY VEGETATION, REACH FINAL GRADE WITHOUT BEING SEEDED OR MULCHED. WAITING UNTIL EARTHMOVING IS COMPLETED BEFORE MAKING PREPARATIONS FOR SEEDING AND MULCHING IS NOT ACCEPTABLE AS DISTURBED AREAS WITHIN A PROJECT APPROACH FINAL GRADE, PREPARATIONS SHOULD BE MADE FOR SEEDING AND MULCHING TO BEING (I.E. ANTICIPATE THE COMPLETION DATE AND SCHEDULE THE SEEDED).
15. FILL SLOPES SHOULD BE SEEDED AND MULCHED AT REGULAR INTERVAL INCREMENTS – 15 TO 25 FEET MAXIMUM – AS THE FILL IS BEING CONSTRUCTED.
16. DURING CONSTRUCTION, IF ANY DEWATERING IS REQUIRED FROM EXCAVATION OR WORK AREAS, IT MUST BE PUMPED THROUGH A PUMPED WATER FILTER BAG PRIOR TO DISCHARGE.
17. TERMINATE AND RENDER SAFE ALL EXISTING UTILITIES THAT SERVICE THE SITE.
18. BEGIN CLEARING AND GRUBBING OPERATIONS.
19. BEGIN EXCAVATION AND ROUGH SITE GRADING. IF ADEQUATE SOILS ARE NOT FOUND ON-SITE SOIL MUST BE IMPORTED. ENVIRONMENTAL DUE DILIGENCE SHALL BE COMPLETED TO ENSURE ALL IMPORTED FILL IS CLEAN FILL AND FREE OF CONTAMINANTS.
20. CONTINUE SITE AND BUILDING EXCAVATION AND RELATED ROUGH GRADING FOR THE PROPOSED
21. BEGIN INSTALLATION OF STORM SEWER SYSTEM COMPONENTS. ENSURE PROPER INLET PROTECTION IS INSTALLED IMMEDIATELY AFTER INLETS ARE CONNECTED TO THE SYSTEM.
22. **CRITICAL STAGE:** INSTALL THE RAIN GARDEN AND ALL ASSOCIATED COMPONENTS SUCH AS THE OUTLET CONTROL STRUCTURE. CONTRACTOR TO ENSURE INLET PROTECTION REMAINS IN PLACE FOR ALL THE TRIBUTARY DRAINAGE AREAS UNTIL FINAL STABILIZATION ON THE SITE IS ACHIEVED.
23. INSTALL WATER, SANITARY, ELECTRIC AND ALL OTHER UTILITY LINES AND APPURTENANCES.
24. BEGIN BUILDING CONSTRUCTION PER ARCHITECTURAL DRAWINGS AFTER THE AREA AROUND THE BUILDING HAS BEEN STABILIZED
25. CARRY OUT FINAL GRADING, PAVING, SEEDING, AND PLANTING. THIS INCLUDES THE FINAL PLANTING AND STABILIZATION OF THE INFILTRATION BASINS. ALL DISTURBED AND OVER COMPACTED AREAS SHALL RECEIVE SOIL AMENDMENT AND RESTORATION. NO MORE THAN 15,000 SF OF DISTURBED AREA SHALL REACH FINAL GRADE BEFORE INITIATING SEEDING AND MULCHING OPERATIONS.
26. AREAS WHICH ARE TO BE TOPSOILED SHALL BE SCARIFIED TO A MINIMUM DEPTH OF 3 TO 5 INCHES – 6 TO 12 INCHES ON COMPACTED SOILS – PRIOR TO PLACEMENT OF TOPSOIL. AREAS TO BE VEGETATED SHALL HAVE A MINIMUM 4 INCHES OF TOPSOIL IN PLACE PRIOR TO SEEDING AND MULCHING. FILL OUTSLOPES SHALL HAVE A MINIMUM OF 2 INCHES OF TOPSOIL
27. INSTALL ANY FINAL SITE STABILIZATION MEASURES.
28. ALL EXPOSED EARTH SHALL BE STABILIZED IN ACCORDANCE WITH THE UNION COUNTY CONSERVATION DISTRICT SITE STABILIZATION GUIDELINES. CESSATION OF ACTIVITY FOR 4 DAYS OR LONGER WILL REQUIRE TEMPORARY STABILIZATION PER E&SPC MANUAL. UPON COMPLETION OR TEMPORARY CESSATION OF EARTH DISTURBANCE ACTIVITY THAT EXCEED 4 DAYS, OR ANY STAGE THEREOF, THE PROJECT SITE SHALL BE IMMEDIATELY STABILIZED WITH THE APPROPRIATE TEMPORARY OR PERMANENT STABILIZATION. DISTURBED SLOPES 3:1 OR GREATER MUST ALSO BE COVERED WITH AN EROSION CONTROL BLANKET OF 'NAG SC150' OR APPROVED EQUAL UNTIL STABILIZED.
29. "TEMPORARY" STABILIZATION SHALL OCCUR WITHIN 72 HOURS OF STOPPED WORK AND "PERMANENT" STABILIZATION SHALL OCCUR WITHIN 7 DAYS OF STOPPED WORK.
30. BEFORE REMOVAL OF EROSION AND SEDIMENT CONTROLS THE CONTRACTOR SHALL CONTACT DCCD FOR FINAL INSPECTION. ONCE DCCD APPROVAL HAS BEEN GRANTED AND THE SITE HAS ACHIEVED FINAL STABILIZATION, EROSION AND SEDIMENT CONTROLS CAN BE REMOVED. AN AREA SHALL BE CONSIDERED TO HAVE ACHIEVED FINAL STABILIZATION WHEN IT HAS A MINIMUM UNIFORM 70% PERENNIAL VEGETATIVE COVER OR OTHER PERMANENT NON-VEGETATIVE COVER WITH A DENSITY SUFFICIENT TO RESIST ACCELERATED SURFACE EROSION AND SUBSURFACE CHARACTERISTICS SUFFICIENT TO RESIST SLIDING AND OTHER MOVEMENTS, ETC. AREAS DISTURBED DURING REMOVAL OR CONVERSION OF THE BMPS SHALL BE STABILIZED IMMEDIATELY. IN ORDER TO ENSURE RAPID REVEGETATION OF DISTURBED AREAS, SUCH REMOVAL/CONVERSIONS ARE TO BE DONE ONLY DURING THE GERMINATING SEASON.
31. UPON ACHIEVEMENT OF FINAL STABILIZATION, CONTRACTOR SHALL COORDINATE A FINAL INSPECTION WITH DCCD AND PROVIDE THE PROPERTY OWNER WITH THE REQUISITE PAPER WORK FOR THE NPDES NOTICE OF TERMINATION.
32. WITHIN 30 DAYS AFTER THE COMPLETION OF EARTH DISTURBANCE ACTIVITIES AUTHORIZED BY THIS PERMIT, INCLUDING THE PERMANENT STABILIZATION OF THE SITE AND PROPER INSTALLATION OF PCSM BMPS IN ACCORDANCE WITH THE APPROVED PCSM PLAN, OR UPON SUBMISSION OF THE NOT IF SOONER, THE PERMITTEE SHALL FILE WITH THE DEPARTMENT OR AUTHORIZED CONSERVATION DISTRICT A STATEMENT SIGNED BY A LICENSED PROFESSIONAL AND BY THE PERMITTEE CERTIFYING THAT WORK HAS BEEN PERFORMED IN ACCORDANCE WITH THE TERMS AND CONDITIONS OF THIS PERMIT AND THE APPROVED E&S AND PCSM PLANS. COMPLETION CERTIFICATES ARE NEEDED TO ENSURE THAT ALL WORK IS PERFORMED IN ACCORDANCE WITH THE TERMS AND CONDITIONS OF THE PERMIT AND THE APPROVED E&S AND PCSM PLANS.

STANDARD E&S CONTROL NOTES:

1. ALL EARTH DISTURBANCES, INCLUDING CLEARING AND GRUBBING AS WELL AS CUTS AND FILLS SHALL BE DONE IN ACCORDANCE WITH THE APPROVED E&S PLAN. A COPY OF THE APPROVED DRAWINGS (STAMPED, SIGNED AND DATED BY THE REVIEWING AGENCY) MUST BE AVAILABLE AT THE PROJECT SITE AT ALL TIMES. THE REVIEWING AGENCY SHALL BE NOTIFIED OF ANY CHANGES TO THE APPROVED PLAN PRIOR TO IMPLEMENTATION OF THOSE CHANGES. THE REVIEWING AGENCY MAY REQUIRE A WRITTEN SUBMITTAL OF THOSE CHANGES FOR REVIEW AND APPROVAL AT ITS DISCRETION.
2. AT LEAST 7 DAYS PRIOR TO STARTING ANY EARTH DISTURBANCE ACTIVITIES, INCLUDING CLEARING AND GRUBBING, THE OWNER AND/OR OPERATOR SHALL INVITE ALL CONTRACTORS, THE LANDOWNER, APPROPRIATE MUNICIPAL OFFICIALS, THE E&S PLAN PREPARER, THE PCSM PLAN PREPARER, THE LICENSED PROFESSIONAL RESPONSIBLE FOR OVERSIGHT OF CRITICAL STAGES OF IMPLEMENTATION OF THE PCSM PLAN, AND A REPRESENTATIVE FROM THE LOCAL CONSERVATION DISTRICT TO AN ON-SITE PRECONSTRUCTION MEETING.
3. AT LEAST 3 DAYS PRIOR TO STARTING ANY EARTH DISTURBANCE ACTIVITIES, OR EXPANDING INTO AN AREA PREVIOUSLY UNMARKED, THE PENNSYLVANIA ONE CALL SYSTEM INC. SHALL BE NOTIFIED AT 1-800-242-1776 FOR THE LOCATION OF EXISTING UNDERGROUND UTILITIES.
4. ALL EARTH DISTURBANCE ACTIVITIES SHALL PROCEED IN ACCORDANCE WITH THE SEQUENCE PROVIDED ON THE PLAN DRAWINGS. DEVIATION FROM THAT SEQUENCE MUST BE APPROVED IN WRITING FROM THE LOCAL CONSERVATION DISTRICT OR BY PADEP PRIOR TO IMPLEMENTATION.
5. AREAS TO BE FILLED ARE TO BE CLEARED, GRUBBED, AND STRIPPED OF TOPSOIL TO REMOVE TREES, VEGETATION, ROOTS AND OTHER OBJECTIONABLE MATERIAL.
6. CLEARING, GRUBBING, AND TOPSOIL STRIPPING SHALL BE LIMITED TO THOSE AREAS DESCRIBED IN EACH STAGE OF THE CONSTRUCTION SEQUENCE. GENERAL SITE CLEARING, GRUBBING AND TOPSOIL STRIPPING MAY NOT COMMENCE IN ANY STAGE OR PHASE OF THE PROJECT UNTIL THE E&S BMPS SPECIFIED BY THE BMP SEQUENCE FOR THAT STAGE OR PHASE HAVE BEEN INSTALLED AND ARE FUNCTIONING AS DESCRIBED IN THIS E&S PLAN.
7. AT NO TIME SHALL CONSTRUCTION VEHICLES BE ALLOWED TO ENTER AREAS OUTSIDE THE LIMIT OF DISTURBANCE BOUNDARIES SHOWN ON THE PLAN MAPS. THESE AREAS MUST BE CLEARLY MARKED AND FENCED OFF BEFORE CLEARING AND GRUBBING OPERATIONS BEGIN.
8. TOPSOIL REQUIRED FOR THE ESTABLISHMENT OF VEGETATION SHALL BE STOCKPILED AT THE LOCATION(S) SHOWN ON THE PLAN MAP(S) IN THE AMOUNT NECESSARY TO COMPLETE THE FINISH GRADING OF ALL EXPOSED AREAS THAT ARE TO BE STABILIZED BY VEGETATION. EACH STOCKPILE SHALL BE PROTECTED IN THE MANNER SHOWN ON THE PLAN DRAWINGS. STOCKPILE HEIGHTS SHALL NOT EXCEED 35 FEET. STOCKPILE SLOPES SHALL BE 3H:1V OR FLATTER.
9. IMMEDIATELY UPON DISCOVERING UNFORESEEN CIRCUMSTANCES POSING THE POTENTIAL FOR ACCELERATED EROSION AND/OR SEDIMENT POLLUTION, THE OPERATOR SHALL IMPLEMENT APPROPRIATE BEST MANAGEMENT PRACTICES TO MINIMIZE THE POTENTIAL FOR EROSION AND SEDIMENT POLLUTION AND NOTIFY THE LOCAL CONSERVATION DISTRICT AND/OR THE REGIONAL OFFICE OF PADEP.
10. ALL BUILDING MATERIALS AND WASTES SHALL BE REMOVED FROM THE SITE AND RECYCLED OR DISPOSED OF IN ACCORDANCE WITH PADEP'S SOLID WASTE MANAGEMENT REGULATIONS AT 25 PA. CODE 260.1 ET SEQ., 271.1, AND 287.1 ET. SEQ. NO BUILDING MATERIALS OR WASTES OR UNUSED BUILDING MATERIALS SHALL BE BURNED, BURIED, DUMPED, OR DISCHARGED AT THE SITE.
11. ALL OFF-SITE WASTE AND BORROW AREAS MUST HAVE AN E&S PLAN APPROVED BY THE LOCAL CONSERVATION DISTRICT OR PADEP FULLY IMPLEMENTED PRIOR TO BEING ACTIVATED.
12. THE CONTRACTOR IS RESPONSIBLE FOR ENSURING THAT ANY MATERIAL BROUGHT ON SITE IS CLEAN FILL. FORM FP-001 MUST BE RETAINED BY THE PROPERTY OWNER FOR ANY FILL MATERIAL AFFECTED BY A SPILL OR RELEASE OF A REGULATED SUBSTANCE BUT QUALIFYING AS CLEAN FILL DUE TO ANALYTICAL TESTING.
13. ALL PUMPING OF WATER FROM ANY WORK AREA SHALL BE COMPLETED UTILIZING PUMPED WATER FILTER BAGS, UNLESS OTHERWISE SPECIFIED, AND DISCHARGED OVER UNDISTURBED VEGETATED AREAS.
14. UNTIL THE SITE IS STABILIZED, ALL EROSION AND SEDIMENT BMPS SHALL BE MAINTAINED PROPERLY. MAINTENANCE SHALL INCLUDE INSPECTIONS OF ALL EROSION AND SEDIMENT BMPS AFTER EACH RUNOFF EVENT AND ON A WEEKLY BASIS. ALL PREVENTATIVE AND REMEDIAL MAINTENANCE WORK, INCLUDING CLEAN OUT, REPAIR, REPLACEMENT, REGRADING, RESEEDING, REMULCHING AND RENETTING MUST BE PERFORMED IMMEDIATELY. IF THE E&S BMPS FAIL TO PERFORM AS EXPECTED, REPLACEMENT BMPS, OR MODIFICATIONS OF THOSE INSTALLED WILL BE REQUIRED.
15. A LOG SHOWING DATES THAT E&S BMPS WERE INSPECTED AS WELL AS ANY DEFICIENCIES FOUND AND THE DATE THEY WERE CORRECTED SHALL BE MAINTAINED ON THE SITE AND BE MADE AVAILABLE TO REGULATORY AGENCY OFFICIALS AT THE TIME OF INSPECTION.
16. SEDIMENT TRACKED ONTO ANY PUBLIC ROADWAY OR SIDEWALK SHALL BE RETURNED TO THE CONSTRUCTION SITE BY THE END OF EACH WORK DAY AND DISPOSED IN THE MANNER DESCRIBED IN THIS PLAN. IN NO CASE SHALL THE SEDIMENT BE WASHED, SHOVELED, OR SWEPT INTO ANY ROADSIDE DITCH, STORM SEWER, OR SURFACE WATER.
17. ALL SEDIMENT REMOVED FROM BMPS SHALL BE PLACED IN UPSLOPE, NON-SENSITIVE AREAS WITHIN THE LIMIT OF DISTURBANCE AND BE STABILIZED WITH SEED AND STRAW MULCH.
18. AREAS WHICH ARE TO BE TOPSOILED SHALL BE SCARIFIED TO A MINIMUM DEPTH OF 3 TO 5 INCHES -- 6 TO 12 INCHES ON COMPACTED SOILS -- PRIOR TO PLACEMENT OF TOPSOIL. AREAS TO BE VEGETATED SHALL HAVE A MINIMUM 4 INCHES OF TOPSOIL IN PLACE PRIOR TO SEEDING AND MULCHING. FILL OUTSLOPES SHALL HAVE A MINIMUM OF 2 INCHES OF TOPSOIL.
19. ALL FILLS SHALL BE COMPACTED AS REQUIRED TO REDUCE EROSION, SLIPPAGE, SETTLEMENT, SUBSIDENCE OR OTHER RELATED PROBLEMS. FILL INTENDED TO SUPPORT BUILDINGS, STRUCTURES AND CONDUITS, ETC. SHALL BE COMPACTED IN ACCORDANCE WITH LOCAL REQUIREMENTS OR CODES.
20. ALL EARTHEN FILLS SHALL BE PLACED IN COMPACTED LAYERS NOT TO EXCEED 9 INCHES IN THICKNESS.
21. FILL MATERIALS SHALL BE FREE OF FROZEN PARTICLES, BRUSH, ROOTS, SOD, OR OTHER FOREIGN OR OBJECTIONABLE MATERIALS THAT WOULD INTERFERE WITH OR PREVENT CONSTRUCTION OF SATISFACTORY FILLS.
22. FROZEN MATERIALS OR SOFT, MUCKY, OR HIGHLY COMPRESSIBLE MATERIALS SHALL NOT BE INCORPORATED INTO FILLS.
23. FILL SHALL NOT BE PLACED ON SATURATED OR FROZEN SURFACES.
24. FILL MATERIAL FOR EMBANKMENTS SHALL BE FREE OF ROOTS, OR OTHER WOODY VEGETATION, ORGANIC MATERIAL, LARGE STONES, AND OTHER OBJECTIONABLE MATERIAL. THE EMBANKMENT SHALL BE COMPACTED IN MAXIMUM 18" LAYERED LIFTS AT 95% DENSITY.
25. SEEPS OR SPRINGS ENCOUNTERED DURING CONSTRUCTION SHALL BE HANDLED IN ACCORDANCE WITH THE STANDARD AND SPECIFICATION FOR SUBSURFACE DRAIN OR OTHER APPROVED METHOD.
26. ALL GRADED AREAS SHALL BE PERMANENTLY STABILIZED IMMEDIATELY UPON REACHING FINISHED GRADE. CUT SLOPES IN COMPETENT BEDROCK AND ROCK FILLS NEED NOT BE VEGETATED. SEEDED AREAS WITHIN 50 FEET OF A SURFACE WATER, ON SLOPES 3:1 OR GREATER, OR AS OTHERWISE SHOWN ON THE PLAN DRAWINGS, SHALL BE BLANKETED WITH TYPE 'NAG SC150', OR APPROVED EQUAL.
27. IMMEDIATELY AFTER EARTH DISTURBANCE ACTIVITIES CEASE IN ANY AREA OR SUBAREA OF THE PROJECT, THE OPERATOR SHALL STABILIZE ALL DISTURBED AREAS. DURING NON-GERMINATING MONTHS, MULCH OR PROTECTIVE BLANKETING SHALL BE APPLIED AS DESCRIBED IN THE PLAN. AREAS NOT AT FINISHED GRADE, WHICH WILL BE REACTIVATED WITHIN 1 YEAR, MAY BE STABILIZED IN ACCORDANCE WITH THE TEMPORARY STABILIZATION SPECIFICATIONS. THOSE AREAS WHICH WILL NOT BE REACTIVATED WITHIN 1 YEAR SHALL BE STABILIZED IN ACCORDANCE WITH THE PERMANENT STABILIZATION SPECIFICATIONS.
28. PERMANENT STABILIZATION IS DEFINED AS A MINIMUM UNIFORM, PERENNIAL 70% VEGETATIVE COVER OR OTHER PERMANENT NON-VEGETATIVE COVER WITH A DENSITY SUFFICIENT TO RESIST ACCELERATED EROSION. CUT AND FILL SLOPES SHALL BE CAPABLE OF RESISTING FAILURE DUE TO SLUMPING, SLIDING, OR OTHER MOVEMENTS.
29. E&S BMPS SHALL REMAIN FUNCTIONAL AS SUCH UNTIL ALL AREAS TRIBUTARY TO THEM ARE PERMANENTLY STABILIZED OR UNTIL THEY ARE REPLACED BY ANOTHER BMP APPROVED BY THE LOCAL CONSERVATION DISTRICT OR PADEP.
30. UPON COMPLETION OF ALL EARTH DISTURBANCE ACTIVITIES AND PERMANENT STABILIZATION OF ALL DISTURBED AREAS, THE OWNER AND/OR OPERATOR SHALL CONTACT THE LOCAL CONSERVATION DISTRICT FOR AN INSPECTION PRIOR TO REMOVAL/CONVERSION OF THE E&S BMPS.
31. AFTER FINAL SITE STABILIZATION HAS BEEN ACHIEVED, TEMPORARY EROSION AND SEDIMENT BMPS MUST BE REMOVED OR CONVERTED TO PERMANENT POST CONSTRUCTION STORMWATER MANAGEMENT BMPS. AREAS DISTURBED DURING REMOVAL OR CONVERSION OF THE BMPS SHALL BE STABILIZED IMMEDIATELY. IN ORDER TO ENSURE RAPID REVEGETATION OF DISTURBED AREAS, SUCH REMOVAL/CONVERSIONS ARE TO BE DONE ONLY DURING THE GERMINATING SEASON.
32. UPON COMPLETION OF ALL EARTH DISTURBANCE ACTIVITIES AND PERMANENT STABILIZATION OF ALL DISTURBED AREAS, THE OWNER AND/OR OPERATOR SHALL CONTACT THE LOCAL CONSERVATION DISTRICT TO SCHEDULE A FINAL INSPECTION.
33. FAILURE TO CORRECTLY INSTALL E&S BMPS, FAILURE TO PREVENT SEDIMENT-LADEN RUNOFF FROM LEAVING THE CONSTRUCTION SITE, OR FAILURE TO TAKE IMMEDIATE CORRECTIVE ACTION TO RESOLVE FAILURE OF E&S BMPS MAY RESULT IN ADMINISTRATIVE, CIVIL, AND/OR CRIMINAL PENALTIES BEING INSTITUTED BY PADEP AS DEFINED IN SECTION 602 OF THE PENNSYLVANIA CLEAN STREAMS LAW. THE CLEAN STREAMS LAW PROVIDES FOR UP TO $10,000 PER DAY IN CIVIL PENALTIES, UP TO $10,000 IN SUMMARY CRIMINAL PENALTIES, AND UP TO $25,000 IN MISDEMEANOR CRIMINAL PENALTIES FOR EACH VIOLATION.
34. CONCRETE WASH WATER SHALL ONLY BE DISCHARGED WITHIN A PROPERLY INSTALLED CONCRETE WASHOUT (COMPOST SOCK WASHOUT) LOCATION AS SPECIFIED ON THE PLAN DRAWINGS. IN NO CASE SHALL CONCRETE WASH WATER BE ALLOWED TO ENTER ANY SURFACE WATERS OR GROUNDWATER SYSTEMS.
35. ALL CHANNELS SHALL BE KEPT FREE OF OBSTRUCTIONS INCLUDING BUT NOT LIMITED TO FILL, ROCKS, LEAVES, WOODY DEBRIS, ACCUMULATED SEDIMENT, EXCESS VEGETATION, AND CONSTRUCTION MATERIAL/WASTES.
36. UNDERGROUND UTILITIES CUTTING THROUGH ANY ACTIVE CHANNEL SHALL BE IMMEDIATELY BACKFILLED AND THE CHANNEL RESTORED TO ITS ORIGINAL CROSS-SECTION AND PROTECTIVE LINING. ANY BASE FLOW WITHIN THE CHANNEL SHALL BE CONVEYED PAST THE WORK AREA IN THE MANNER DESCRIBED IN THIS PLAN UNTIL SUCH RESTORATION IS COMPLETE.
37. CHANNELS HAVING RIPRAP, RENO MATTRESS, OR GABION LININGS MUST BE SUFFICIENTLY OVER-EXCAVATED SO THAT THE DESIGN DIMENSIONS WILL BE PROVIDED AFTER PLACEMENT OF THE PROTECTIVE LINING.
38. SEDIMENT BASINS AND/OR TRAPS SHALL BE KEPT FREE OF ALL CONSTRUCTION WASTE, WASH WATER, AND OTHER DEBRIS HAVING POTENTIAL TO CLOG THE BASIN/TRAP OUTLET STRUCTURES AND/OR POLLUTE THE SURFACE WATERS.
39. SEDIMENT BASINS SHALL BE PROTECTED FROM UNAUTHORIZED ACTS BY THIRD PARTIES.
40. ANY DAMAGE THAT OCCURS IN WHOLE OR IN PART AS A RESULT OF BASIN OR TRAP DISCHARGE SHALL BE IMMEDIATELY REPAIRED BY THE PERMITTEE IN A PERMANENT MANNER SATISFACTORY TO THE MUNICIPALITY, LOCAL CONSERVATION DISTRICT, AND THE OWNER OF THE DAMAGED PROPERTY.
41. UPON REQUEST, THE APPLICANT OR HIS CONTRACTOR SHALL PROVIDE AN AS-BUILT (RECORD DRAWING) FOR ANY SEDIMENT BASIN OR TRAP TO THE MUNICIPAL INSPECTOR, LOCAL CONSERVATION DISTRICT OR PADEP.
42. EROSION CONTROL BLANKETING, OF TYPE 'NAG SC150', OR APPROVED EQUAL, SHALL BE INSTALLED ON ALL SLOPES 3H:1V OR STEEPER WITHIN 50 FEET OF A SURFACE WATER AND ON ALL OTHER DISTURBED AREAS SPECIFIED ON THE PLAN MAPS AND/OR DETAIL SHEETS.

TEMPORARY MULCHING NOTES:

A. MULCH PROPOSED LANDSCAPE AREAS OF TOPSOIL STOCKPILES IF EARTHWORK IS COMPLETED OUTSIDE OF THE RECOMMENDED PLANTING SEASONS FOR TEMPORARY SEEDING OR DUE TO UNFAVORABLE WEATHER CONDITIONS.
B. MULCH SHALL BE APPLIED IMMEDIATELY FOLLOWING THE ESTABLISHMENT OF THE TOPSOIL STOCKPILE OR ROUGH GRADING.
C. MULCH WITH SUITABLE FIBROUS GROUND, SHREDDED AGED HARDWOOD, PINEWOOD BARK, STRAW, OR HAY UNIFORMLY AND CONTINUOUSLY TO A LOOSE DEPTH OF 3 INCHES MINIMUM. ANCHOR AS REQUIRED.
D. PROPERLY MAINTAIN MULCHED AREAS UNTIL PERMANENT STABILIZATION MEASURES ARE COMPLETE. REAPPLY MULCH MATERIALS WHICH BECOME DISLODGED AT INITIAL OR MODIFIED RATES AS NECESSARY. IF A SLOPE FAILURE OCCURS WHICH REQUIRES REDRESSING, EXCAVATION, OR THE ESTABLISHMENT OF A NEW SLOPE, REPLACE MULCH AS NECESSARY.

TEMPORARY SEEDING NOTES:

A. THE FOLLOWING SURFACES OF THE SITE SHALL BE TEMPORARILY SEEDED AND MULCHED:
   1. THE SURFACE OF TOPSOIL STOCKPILES.
   2. THE SURFACE OF EXPOSED EARTH AREAS THAT WILL BE EXPOSED WITHOUT CONSTRUCTION ACTIVITY.
B. SEEDING SHALL OCCUR IMMEDIATELY AFTER ESTABLISHMENT OF THE TOPSOIL STOCKPILES OR ROUGH GRADED AREAS. SEED SHALL BE PLANTED BASED ON THE RECOMMENDATIONS IN TABLE 11.2 OF THE ESPC MANUAL. PREPARE AREAS TO BE SEEDED AS FOLLOWS:
   1. REMOVE ALL DEBRIS, INCLUDING LARGE STONE. TILL SOIL TO A DEPTH OF FOUR INCHES TO SIX INCHES. APPLY LIME AT A RATE SPECIFIED.
   2. AREAS WHICH ARE TO BE TOPSOILED SHALL BE SCARIFIED TO A MINIMUM DEPTH OF 3 TO 5 INCHES -- 6 TO 12 INCHES ON COMPACTED SOILS -- PRIOR TO PLACEMENT OF TOPSOIL. AREAS TO BE VEGETATED SHALL HAVE A MINIMUM 4 INCHES OF TOPSOIL IN PLACE PRIOR TO SEEDING AND MULCHING. FILL OUTSLOPES SHALL HAVE A MINIMUM OF 2 INCHES OF TOPSOIL.
   3. APPLY FERTILIZER AT A RATE SPECIFIED AND WORK INTO TOP INCH OF SOIL.
   4. SEED MIX SPECIFICATIONS:
      - SPECIES – ANNUAL RYE GRASS
      - % PURE LIVE SEED – 81%
      - APPLICATION RATE – 40 LBS PER ACRES
      - FERTILIZER TYPE – 10-20-20
      - FERTILIZER APPLICATION RATE – 1000 LBS PER ACRE
      - LIME RATE – 1 TON PER ACRE
      - MULCHING TYPE – HAY/STRAW
      - MULCHING TYPE – 3 TONS PER ACRE
C. SOW SEED AT THE INDICATED RATE. DIVIDE SEED INTO TWO EQUAL LOTS. SOW ONE LOT IN ONE DIRECTION. SOW SECOND LOT AT RIGHT ANGLE TO FIRST LOT. RAKE SEEDED AREA. ROLL SURFACE LIGHTLY TO FIRM SOIL AROUND SEED.
D. PLACE CLEAN DRY STRAW OR HAY MULCH WITHIN 48 HOURS AFTER SEEDING.

THERMAL IMPACTS §102.4(b)(5)(xiii):

THERMAL IMPACTS WILL BE MINIMIZED AND MITIGATED IN THE CONSTRUCTION (E&S) PHASE BY FILTERING RUNOFF THROUGH NATURAL VEGETATION, AND EROSION AND SEDIMENT CONTROLS PRIOR TO DISCHARGING OFF-SITE. COOLING WILL TAKE PLACE IN THE CONSTRUCTION (E&S) PHASE BECAUSE THE GROUND WILL NATURALLY COOL STORMWATER DURING CONSTRUCTION AS PAVEMENT WILL BE LIMITED AND BARE/STRIPPED EARTH WILL BE COOLER DURING CONSTRUCTION.

THERMAL IMPACTS WILL BE MINIMIZED AND MITIGATED IN THE POST CONSTRUCTION CONDITION VIA UTILIZATION OF LANDSCAPE RESTORATION AND RAINGARDEN. THE PROPOSED RAINGARDEN SYSTEM HAS BEEN DESIGNED IN ACCORDANCE WITH THE PA BMP MANUAL RECOMMENDATIONS TO PROVIDE GROUNDWATER RECHARGE WATER QUALITY AND PEAK FLOW RATES REDUCTION BENEFITS FOR THE CONTRIBUTING DRAINAGE AREA. THERMAL IMPACTS WILL BE MINIMIZED BY THE RAINGARDEN SYSTEM, WHICH WILL ALLOW SURFACE RUNOFF TO COOL PRIOR TO DISCHARGE.

DYNAMIC • ENGINEERING • EARTH • SURVEY • TRAFFIC

REV.	DATE	COMMENTS	BY

EROSION & SEDIMENT CONTROL PLANS

DRAWN BY: CMC | DESIGNED BY: MS | CHECKED BY: MAW | CHECKED BY: –

PROJECT: SWATARA PAXTON DEVELOPERS LLC
PROPOSED WAWA FOOD MARKET & FUELING STATION
PARCEL NO. 63-022-037
US ROUTE 322 & BRIDGE ROAD (SR 2018)
TOWNSHIP OF SWATARA, DAUPHIN COUNTY, PENNSYLVANIA

811 Know what's below. Call before you dig.
PROTECT YOURSELF
ALL STATES REQUIRE NOTIFICATION OF EXCAVATORS, DESIGNERS, OR ANY PERSON PREPARING TO DISTURB THE EARTH'S SURFACE ANYWHERE IN ANY STATE
FOR STATE SPECIFIC DIRECT PHONE NUMBERS VISIT: WWW.CALL811.COM

DYNAMIC ENGINEERING
LAND DEVELOPMENT CONSULTING • PERMITTING
GEOTECHNICAL • ENVIRONMENTAL
TRAFFIC • SURVEY • PLANNING & ZONING
826 Newtown Yardley Road
Suite 201, Newtown, PA 18940
T: 267.685.0276 | F: 267.685.0361
Offices conveniently located at:
Lake Como, New Jersey • T: 732.974.0198
Chester, New Jersey • T: 908.879.9229
Marlton, New Jersey • T: 856.334.2000
Newark, New Jersey • T: 973.755.7200
Toms River, New Jersey • T: 732.974.0198
Newtown, Pennsylvania • T: 267.685.0276
Philadelphia, Pennsylvania • T: 215.253.4888
Bethlehem, Pennsylvania • T: 610.598.4400
Allen, Texas • T: 972.534.2100
Houston, Texas • T: 281.789.6400
Austin, Texas • T: 512.646.2646
Delray Beach, Florida • T: 561.921.8570
Annapolis, Maryland • T: 410.567.5000
www.dynamicec.com

JUSTIN A. GEONNOTTI
PROFESSIONAL ENGINEER
PENNSYLVANIA LICENSE No. 080629

MARK A. WHITAKER
PROFESSIONAL ENGINEER
NEW JERSEY LICENSE No. 41417

TITLE: E&S NOTES

SCALE: (H) AS (V) SHOWN | DATE: 11/21/2023
PROJECT No: 1478-99-212

SHEET No: 32 OF 34 | Rev. #: 0

Plotted: 11/22/23 – 12:44 PM, By: nschechter
File: P:\DECPC PROJECTS\1478 Paramount Realty\99-212 Swatara PA\Dwg\Land Dev Plans\D147899212EN0.dwg, ---> 32 E&S NOTES

COPYRIGHT © 2023 – DYNAMIC ENGINEERING CONSULTANTS, PC – ALL RIGHTS RESERVED

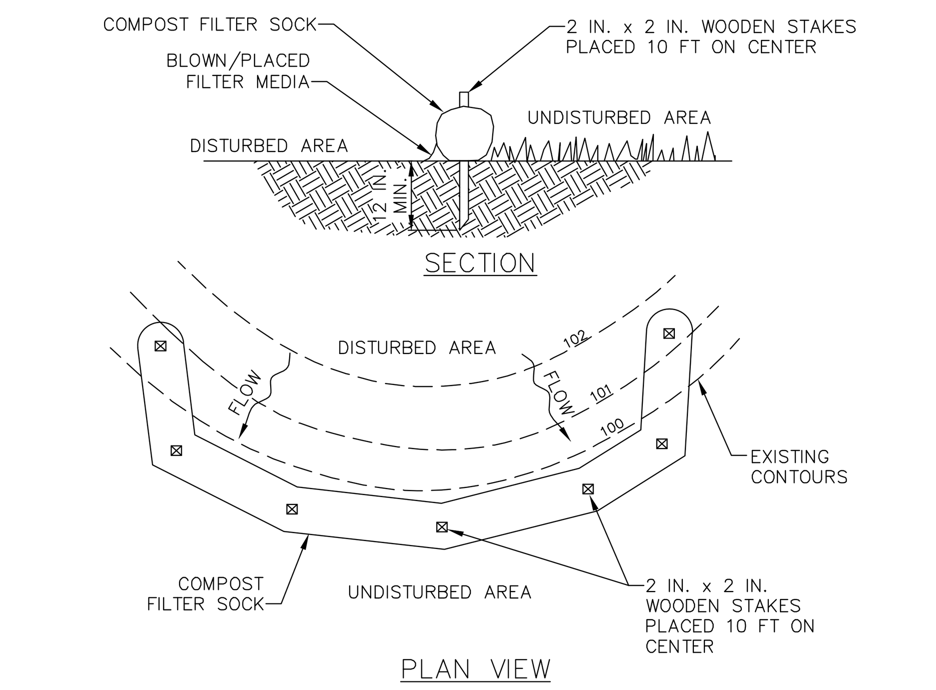

NOTES:

SOCK FABRIC SHALL MEET STANDARDS OF TABLE 4.1 OF THE PA DEP EROSION CONTROL MANUAL. COMPOST SHALL MEET THE STANDARDS OF TABLE 4.2 OF THE PA DEP EROSION CONTROL MANUAL.

COMPOST FILTER SOCK SHALL BE PLACED AT EXISTING LEVEL GRADE. BOTH ENDS OF THE BARRIER SHALL BE EXTENDED AT LEAST 8 FEET UP SLOPE AT 45 DEGREES TO THE MAIN BARRIER ALIGNMENT. MAXIMUM SLOPE LENGTH ABOVE ANY BARRIER SHALL NOT EXCEED THAT SPECIFIED FOR THE SIZE OF THE SOCK AND THE SLOPE OF ITS TRIBUTARY AREA.

TRAFFIC SHALL NOT BE PERMITTED TO CROSS COMPOST FILTER SOCKS.

ACCUMULATED SEDIMENT SHALL BE REMOVED WHEN IT REACHES 1/2 THE ABOVE GROUND HEIGHT OF THE BARRIER AND DISPOSED IN THE MANNER DESCRIBED ELSEWHERE IN THE PLAN.

COMPOST FILTER SOCKS SHALL BE INSPECTED WEEKLY AND AFTER EACH RUNOFF EVENT. DAMAGED SOCKS SHALL BE REPAIRED ACCORDING TO MANUFACTURER'S SPECIFICATIONS OR REPLACED WITHIN 24 HOURS OF INSPECTION.

BIODEGRADABLE COMPOST FILTER SOCKS SHALL BE REPLACED AFTER 6 MONTHS; PHOTODEGRADABLE SOCKS AFTER 1 YEAR. POLYPROPYLENE SOCKS SHALL BE REPLACED ACCORDING TO MANUFACTURER'S RECOMMENDATIONS.

UPON STABILIZATION OF THE AREA TRIBUTARY TO THE SOCK, STAKES SHALL BE REMOVED. THE SOCK MAY BE LEFT IN PLACE AND VEGETATED OR REMOVED. IN THE LATTER CASE, THE MESH SHALL BE CUT OPEN AND THE MULCH SPREAD AS A SOIL SUPPLEMENT.

STANDARD CONSTRUCTION DETAIL #4-1
COMPOST FILTER SOCK

NOT TO SCALE

FIGURE 3.18
Typical Compost Sock Washout Installation

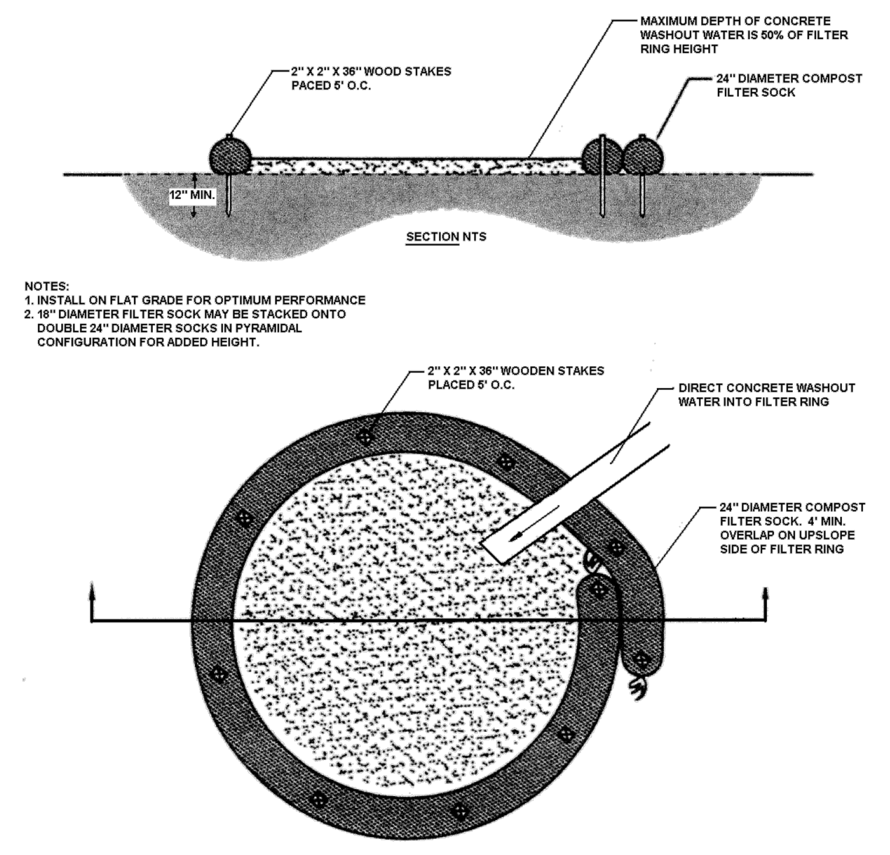

COMPOSITE SOCK CONCRETE WASHOUT DETAIL

NOT TO SCALE

CONCRETE WASHOUT NOTES

SELF-INSTALLED WASHOUTS

1. THESE TYPES OF WASHOUTS SHOULD BE EXCAVATED BELOW GRADE TO PREVENT RUNOFF OF THE WASH WATER AND MINIMIZE THE POTENTIAL FOR BREACHING. THEY SHOULD BE SIZED TO HANDLE SOLIDS, WASH WATER, AND RAINFALL. A GOOD RULE OF THUMB IS THAT 7 GALLONS OF WASH WATER ARE REQUIRED TO WASH ONE TRUCK CHUTE AND 50 GALLONS FOR THE HOPPER OF A CONCRETE PUMP TRUCK.
2. FOR LARGER SITES, A BELOW-GRADE WASHOUT SHOULD BE A MINIMUM OF 10 FEET WIDE AND PROVIDE AT LEAST 12 INCHES OF FREEBOARD ABOVE THE LIQUID AND SOLID WASTE ANTICIPATED BETWEEN CLEANOUT INTERVALS. THE PIT SHOULD BE LINED WITH PLASTIC SHEETING OF AT LEAST 10-MIL THICKNESS (WITH NO HOLES OR TEARS) TO PREVENT LEACHING OF LIQUIDS INTO THE GROUND.
3. A SUITABLE IMPERVIOUS GEOMEMBRANE SHALL BE PLACED AT THE BOTTOM OF THE WASHOUT PRIOR TO INSTALLING THE SOCKS.

MAINTENANCE

1. ALL CONCRETE WASHOUT FACILITIES SHOULD BE INSPECTED DAILY. DAMAGED OR LEAKING WASHOUTS SHOULD BE DEACTIVATED AND REPAIRED OR REPLACED IMMEDIATELY.
2. ACCUMULATED MATERIALS SHOULD BE REMOVED WHEN THEY REACH 75% CAPACITY.
3. PLASTIC LINERS SHOULD BE REPLACED WITH EACH CLEANING OF THE WASHOUT FACILITY.

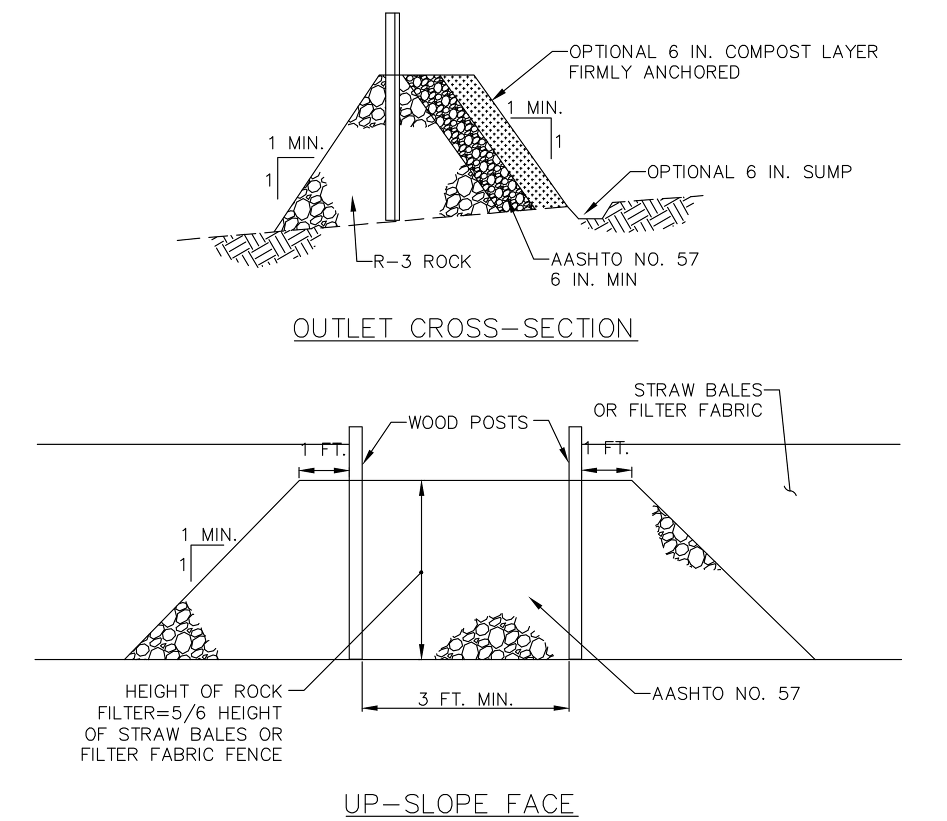

NOTES:

A ROCK FILTER OUTLET SHALL BE INSTALLED WHERE FAILURE OF A SILT FENCE OR STRAW BALE BARRIER HAS OCCURRED DUE TO CONCENTRATED FLOW. ANCHORED COMPOST LAYER SHALL BE USED ON UPSLOPE FACE IN HQ AND EV WATERSHEDS.

SEDIMENT SHALL BE REMOVED WHEN ACCUMULATIONS REACH 1/3 THE HEIGHT OF THE OUTLET.

STANDARD CONSTRUCTION DETAIL #4-6
ROCK FILTER OUTLET

NOT TO SCALE

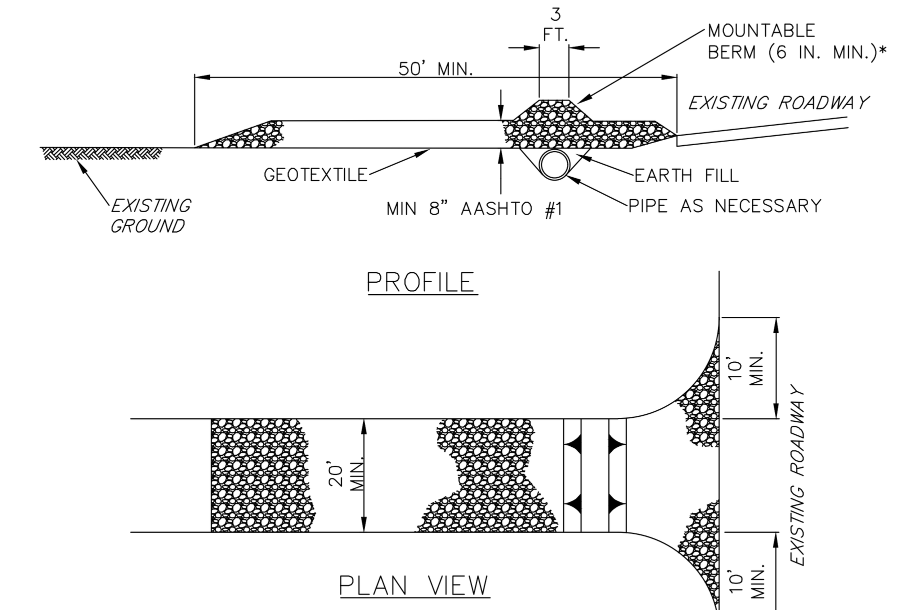

* MOUNTABLE BERM USED TO PROVIDE PROPER COVER FOR PIPE

NOTES:

REMOVE TOPSOIL PRIOR TO INSTALLATION OF ROCK CONSTRUCTION ENTRANCE. EXTEND ROCK OVER FULL WIDTH OF ENTRANCE.

RUNOFF SHALL BE DIVERTED FROM ROADWAY TO A SUITABLE SEDIMENT REMOVAL BMP PRIOR TO ENTERING ROCK CONSTRUCTION ENTRANCE.

MOUNTABLE BERM SHALL BE INSTALLED WHEREVER OPTIONAL CULVERT PIPE IS USED AND PROPER PIPE COVER AS SPECIFIED BY MANUFACTURER IS NOT OTHERWISE PROVIDED. PIPE SHALL BE SIZED APPROPRIATELY FOR SIZE OF DITCH BEING CROSSED.

MAINTENANCE: ROCK CONSTRUCTION ENTRANCE THICKNESS SHALL BE CONSTANTLY MAINTAINED TO THE SPECIFIED DIMENSIONS BY ADDING ROCK. A STOCKPILE SHALL BE MAINTAINED ON SITE FOR THIS PURPOSE. ALL SEDIMENT DEPOSITED ON PAVED ROADWAYS SHALL BE REMOVED AND RETURNED TO THE CONSTRUCTION SITE IMMEDIATELY. IF EXCESSIVE AMOUNTS OF SEDIMENT ARE BEING DEPOSITED ON ROADWAY, EXTEND LENGTH OF ROCK CONSTRUCTION ENTRANCE BY 50 FOOT INCREMENTS UNTIL CONDITION IS ALLEVIATED OR INSTALL WASH RACK. WASHING THE ROADWAY OR SWEEPING THE DEPOSITS INTO ROADWAY DITCHES, SEWERS, CULVERTS, OR OTHER DRAINAGE COURSES IS NOT ACCEPTABLE.

STANDARD CONSTRUCTION DETAIL #3-1
ROCK CONSTRUCTION ENTRANCE

NOT TO SCALE

STANDARD WORKSHEET # 1
Compost Filter Socks

PROJECT NAME: Proposed Wawa Food Market & Fuel Station
LOCATION: Swatara Township, PA
PREPARED BY: RAM — DATE: 11/15/2023
CHECKED BY: TLN — DATE: 11/15/2023

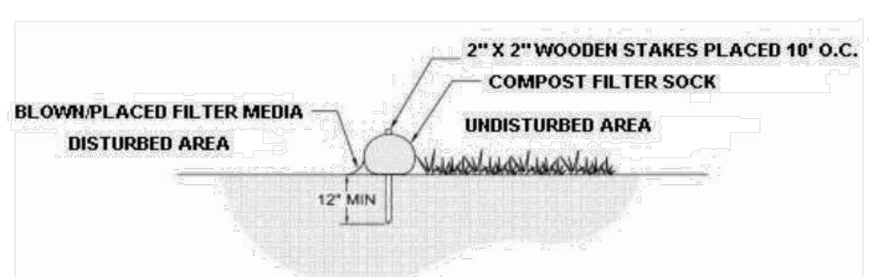

SOCK NO.	DIA. IN.	LOCATION	SLOPE PERCENT	SLOPE LENGTH ABOVE BARRIER (FT)
1	24"	EASTERN PERIMETER	4%	505
2	24"	EASTERN PERIMETER	4%	510
3	24"	EASTERN PERIMETER	4%	500
4	24"	EASTERN PERIMETER	4%	520
5	24"	STOCKPILE	33%	30

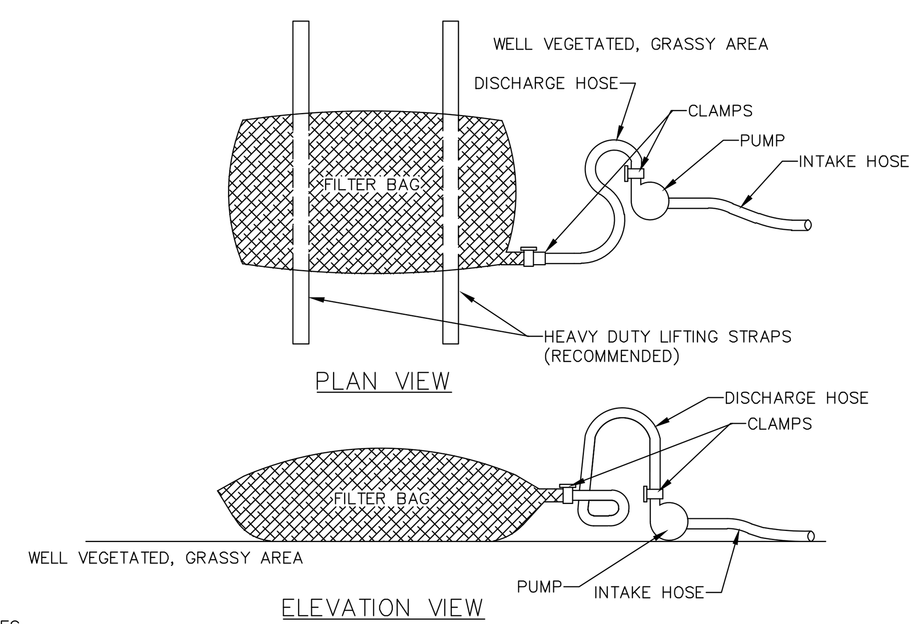

NOTES:

LOW VOLUME FILTER BAGS SHALL BE MADE FROM NON-WOVEN GEOTEXTILE MATERIAL SEWN WITH HIGH STRENGTH, DOUBLE STITCHED "J" TYPE SEAMS. THEY SHALL BE CAPABLE OF TRAPPING PARTICLES LARGER THAN 150 MICRONS. HIGH VOLUME FILTER BAGS SHALL BE MADE FROM WOVEN GEOTEXTILES THAT MEET THE FOLLOWING STANDARDS:

PROPERTY	TEST METHOD	MINIMUM STANDARD
AVG. WIDE WIDTH STRENGTH	ASTM D-4884	60 LB/IN
GRAB TENSILE	ASTM D-4632	205 LB
PUNCTURE	ASTM D-4833	110 LB
MULLEN BURST	ASTM D-3786	350 PSI
UV RESISTANCE	ASTM D-4355	70%
AOS % RETAINED	ASTM D-4751	80 SIEVE

A SUITABLE MEANS OF ACCESSING THE BAG WITH MACHINERY REQUIRED FOR DISPOSAL PURPOSES SHALL BE PROVIDED. FILTER BAGS SHALL BE REPLACED WHEN THEY BECOME 1/2 FULL OF SEDIMENT. SPARE BAGS SHALL BE KEPT AVAILABLE FOR REPLACEMENT OF THOSE THAT HAVE FAILED OR ARE FILLED. BAGS SHALL BE PLACED ON STRAPS TO FACILITATE REMOVAL UNLESS BAGS COME WITH LIFTING STRAPS ALREADY ATTACHED.

BAGS SHALL BE LOCATED IN WELL-VEGETATED (GRASSY) AREA, AND DISCHARGE ONTO STABLE, EROSION RESISTANT AREAS. WHERE THIS IS NOT POSSIBLE, A GEOTEXTILE UNDERLAYMENT AND FLOW PATH SHALL BE PROVIDED. BAGS MAY BE PLACED ON FILTER STONE TO INCREASE DISCHARGE CAPACITY. BAGS SHALL NOT BE PLACED ON SLOPES GREATER THAN 5%. FOR SLOPES EXCEEDING 5%, CLEAN ROCK OR OTHER NON-ERODIBLE AND NON-POLLUTING MATERIAL MAY BE PLACED UNDER THE BAG TO REDUCE SLOPE STEEPNESS.

NO DOWNSLOPE SEDIMENT BARRIER IS REQUIRED FOR MOST INSTALLATIONS. COMPOST BERM OR COMPOST FILTER SOCK SHALL BE INSTALLED BELOW BAGS LOCATED IN HQ OR EV WATERSHEDS, WITHIN 50 FEET OF ANY RECEIVING SURFACE WATER OR WHERE GRASSY AREA IS NOT AVAILABLE.

THE PUMP DISCHARGE HOSE SHALL BE INSERTED INTO THE BAGS IN THE MANNER SPECIFIED BY THE MANUFACTURER AND SECURELY CLAMPED. A PIECE OF PVC PIPE IS RECOMMENDED FOR THIS PURPOSE.

THE PUMPING RATE SHALL BE NO GREATER THAN 750 GPM OR 1/2 THE MAXIMUM SPECIFIED BY THE MANUFACTURER, WHICHEVER IS LESS. PUMP INTAKES SHALL BE FLOATING AND SCREENED.

FILTER BAGS SHALL BE INSPECTED DAILY. IF ANY PROBLEM IS DETECTED, PUMPING SHALL CEASE IMMEDIATELY AND NOT RESUME UNTIL THE PROBLEM IS CORRECTED.

STANDARD CONSTRUCTION DETAIL #3-16
PUMPED WATER FILTER BAG

NOT TO SCALE

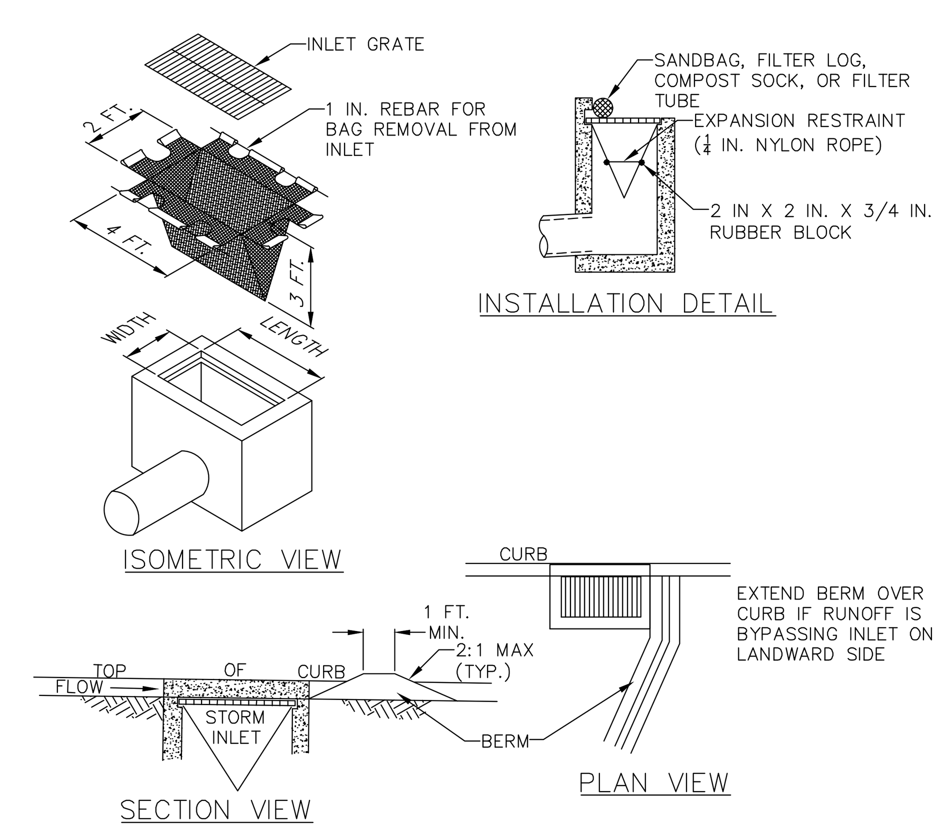

NOTES:

MAXIMUM DRAINAGE AREA = 1/2 ACRE.

INLET PROTECTION SHALL NOT BE REQUIRED FOR INLET TRIBUTARY TO SEDIMENT BASIN OR TRAP. BERMS SHALL BE REQUIRED FOR ALL INSTALLATIONS.

ROLLED EARTHEN BERM SHALL BE MAINTAINED UNTIL ROADWAY IS STONED. ROAD SUBBASE BERM SHALL BE MAINTAINED UNTIL ROADWAY IS PAVED. SIX INCH MINIMUM HEIGHT ASPHALT BERM SHALL BE MAINTAINED UNTIL ROADWAY SURFACE RECEIVES FINAL COAT.
AT A MINIMUM, THE FABRIC SHALL HAVE A MINIMUM GRAB TENSILE STRENGTH OF 120 LBS, A MINIMUM BURST STRENGTH OF 200 PSI, AND A MINIMUM TRAPEZOIDAL TEAR STRENGTH OF 50 LBS. FILTER BAGS SHALL BE CAPABLE OF TRAPPING ALL PARTICLES NOT PASSING A NO. 40 SIEVE.

INLET FILTER BAGS SHALL BE INSPECTED ON A WEEKLY BASIS AND AFTER EACH RUNOFF EVENT. BAGS SHALL BE EMPTIED AND RINSED OR REPLACED WHEN HALF FULL OR WHEN FLOW CAPACITY HAS BEEN REDUCED SO AS TO CAUSE FLOODING OR BYPASSING OF THE INLET. DAMAGED OR CLOGGED BAGS SHALL BE REPLACED. A SUPPLY SHALL BE MAINTAINED ON SITE FOR REPLACEMENT OF BAGS. ALL NEEDED REPAIRS SHALL BE INITIATED IMMEDIATELY AFTER THE INSPECTION. DISPOSE OF ACCUMULATED SEDIMENT AS WELL AS ALL USED BAGS ACCORDING TO THE PLAN NOTES.

DO NOT USE ON MAJOR PAVED ROADWAYS WHERE PONDING MAY CAUSE TRAFFIC HAZARDS.

STANDARD CONSTRUCTION DETAIL #4-15
FILTER BAG INLET PROTECTION - TYPE C INLET

NOT TO SCALE

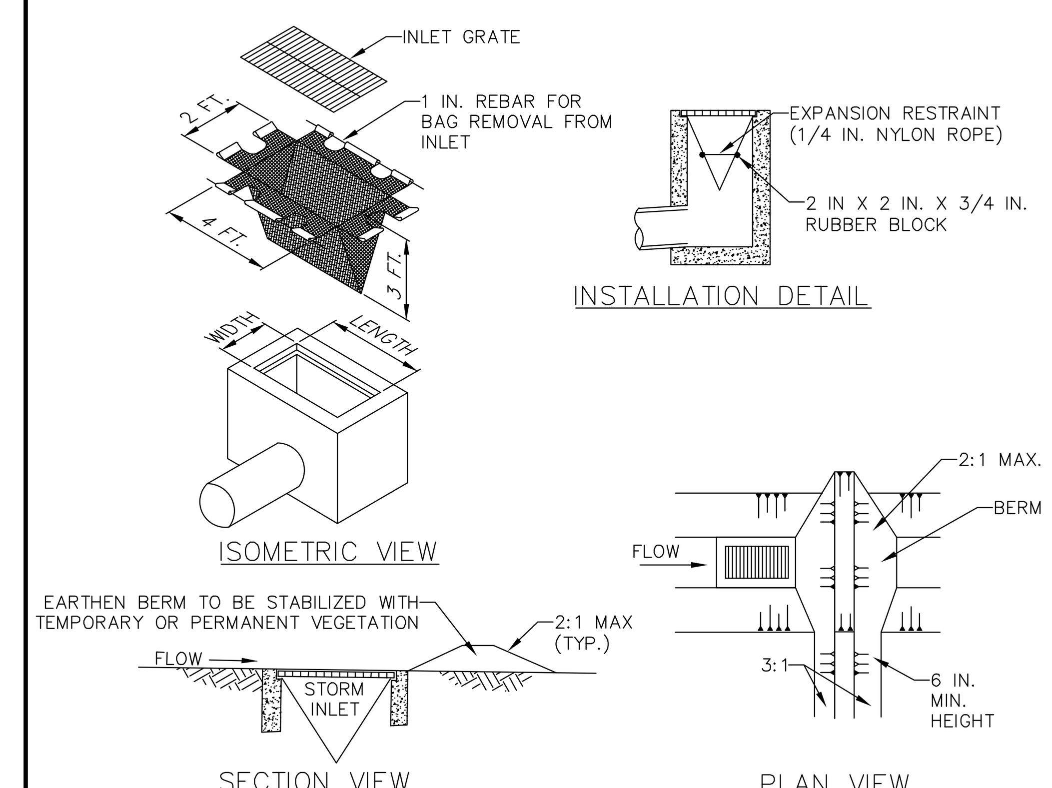

NOTES:

MAXIMUM DRAINAGE AREA = 1/2 ACRE.

INLET PROTECTION SHALL NOT BE REQUIRED FOR INLET TRIBUTARY TO SEDIMENT BASIN OR TRAP. BERMS SHALL BE REQUIRED FOR ALL INSTALLATIONS.

ROLLED EARTHEN BERM IN ROADWAY SHALL BE MAINTAINED UNTIL ROADWAY IS STONED. ROAD SUBBASE BERM ON ROADWAY SHALL BE MAINTAINED UNTIL ROADWAY IS PAVED. EARTHEN BERM IN CHANNEL SHALL BE MAINTAINED UNTIL PERMANENT STABILIZATION IS COMPLETED OR REMAIN PERMANENTLY.

AT A MINIMUM, THE FABRIC SHALL HAVE A MINIMUM GRAB TENSILE STRENGTH OF 120 LBS., A MINIMUM BURST STRENGTH OF 200 PSI, AND A MINIMUM TRAPEZOIDAL TEAR STRENGTH OF 50 LBS. FILTER BAGS SHALL BE CAPABLE OF TRAPPING ALL PARTICLES NOT PASSING A NO. 40 SIEVE.

INLET FILTER BAGS SHALL BE INSPECTED ON A WEEKLY BASIS AND AFTER EACH RUNOFF EVENT. BAGS SHALL BE EMPTIED AND RINSED OR REPLACED WHEN HALF FULL OR WHEN FLOW CAPACITY HAS BEEN REDUCED SO AS TO CAUSE FLOODING OR BYPASSING OF THE INLET. DAMAGED OR CLOGGED BAGS SHALL BE REPLACED. A SUPPLY SHALL BE MAINTAINED ON SITE FOR REPLACEMENT OF BAGS. ALL NEEDED REPAIRS SHALL BE INITIATED IMMEDIATELY AFTER THE INSPECTION. DISPOSE OF ACCUMULATED SEDIMENT AS WELL AS ALL USED BAGS ACCORDING TO THE PLAN NOTES.

DO NOT USE ON MAJOR PAVED ROADWAYS WHERE PONDING MAY CAUSE TRAFFIC HAZARDS.

STANDARD CONSTRUCTION DETAIL #4-16
FILTER BAG INLET PROTECTION - TYPE M INLET

NOT TO SCALE

DYNAMIC
• ENGINEERING • EARTH • SURVEY • TRAFFIC

REV.	DATE	COMMENTS	BY

EROSION & SEDIMENT CONTROL PLANS

DRAWN BY: CMC | DESIGNED BY: MS | CHECKED BY: MAW | CHECKED BY: –

PROJECT: **SWATARA PAXTON DEVELOPERS LLC**
PROPOSED WAWA FOOD MARKET & FUELING STATION
PARCEL NO. 63-022-037
US ROUTE 322 & BRIDGE ROAD (SR 2018)
TOWNSHIP OF SWATARA, DAUPHIN COUNTY, PENNSYLVANIA

811 Know what's below. Call before you dig.
PROTECT YOURSELF
ALL STATES REQUIRE NOTIFICATION OF EXCAVATORS, DESIGNERS, OR ANY PERSON PREPARING TO DISTURB THE EARTH'S SURFACE ANYWHERE IN ANY STATE
FOR STATE SPECIFIC DIRECT PHONE NUMBERS VISIT: WWW.CALL811.COM

DYNAMIC ENGINEERING
LAND DEVELOPMENT CONSULTING • PERMITTING
GEOTECHNICAL • ENVIRONMENTAL
TRAFFIC • SURVEY • PLANNING & ZONING
826 Newtown Yardley Road
Suite 201, Newtown, PA 18940
T: 267.685.0276 | F: 267.685.0361
Offices conveniently located at:
Lake Como, New Jersey • T: 732.974.0198
Chester, New Jersey • T: 908.879.9229
Marlton, New Jersey • T: 856.334.2000
Newark, New Jersey • T: 973.755.7200
Toms River, New Jersey • T: 732.974.0198
Newtown, Pennsylvania • T: 267.685.0276
Philadelphia, Pennsylvania • T: 215.253.4888
Bethlehem, Pennsylvania • T: 610.598.4400
Allen, Texas • T: 972.534.2100
Houston, Texas • T: 281.789.6400
Austin, Texas • T: 512.646.2646
Delray Beach, Florida • T: 561.921.8570
Annapolis, Maryland • T: 410.567.5000
www.dynamicec.com

JUSTIN A. GEONNOTTI
PROFESSIONAL ENGINEER
PENNSYLVANIA LICENSE No. PE080629

MARK A. WHITAKER
PROFESSIONAL ENGINEER
NEW JERSEY LICENSE No. 41417

TITLE: E&S DETAILS

SCALE: (H) AS (V) SHOWN | DATE: 11/21/2023
PROJECT No: 1478-99-212

SHEET No: 33 OF 34 | Rev. #: 0

Plotted: 11/22/23 – 12:44 PM, By: nschechter
File: P:\DECPC PROJECTS\1478 Paramount Realty\99-212 Swatara PA\Dwg\Land Dev Plans\D147899212ED0.dwg, ---> 33 E&S DETAILS

COPYRIGHT © 2023 – DYNAMIC ENGINEERING CONSULTANTS, PC – ALL RIGHTS RESERVED

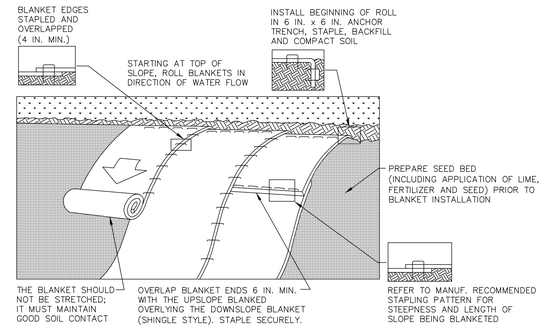

NOTES:

SEED AND SOIL AMENDMENTS SHALL BE APPLIED ACCORDING TO THE RATES IN THE PLAN DRAWINGS PRIOR TO INSTALLING THE BLANKET.

PROVIDE ANCHOR TRENCH AT TOE OF SLOPE IN SIMILAR FASHION AS AT TOP OF SLOPE.

SLOPE SURFACE SHALL BE FREE OF ROCKS, CLODS, STICKS, AND GRASS.

BLANKET SHALL HAVE GOOD CONTINUOUS CONTACT WITH UNDERLYING SOIL THROUGHOUT ENTIRE LENGTH. LAY BLANKET LOOSELY AND STAKE OR STAPLE TO MAINTAIN DIRECT CONTACT WITH SOIL. DO NOT STRETCH BLANKET.

THE BLANKET SHALL BE STAPLED IN ACCORDANCE WITH THE MANUFACTURER'S RECOMMENDATIONS.

BLANKETED AREAS SHALL BE INSPECTED WEEKLY AND AFTER EACH RUNOFF EVENT UNTIL PERENNIAL VEGETATION IS ESTABLISHED TO A MINIMUM UNIFORM 70% COVERAGE THROUGHOUT THE BLANKETED AREA. DAMAGED OR DISPLACED BLANKETS SHALL BE RESTORED OR REPLACED WITHIN 4 CALENDAR DAYS.

STANDARD CONSTRUCTION DETAIL #11-1
EROSION CONTROL BLANKET INSTALLATION

NOT TO SCALE

STANDARD WORKSHEET #20
Riprap Apron Outlet Protection

PROJECT NAME:	Proposed Wawa Food Market & Fuel Station		
LOCATION:	Swatara Township, PA		
PREPARED BY:	RAM	DATE:	11/15/2023
CHECKED BY:	TLN	DATE:	11/15/2023

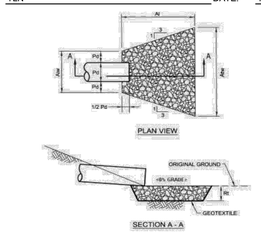

NO.	PIPE DIA. Do (in.)	TAIL WATER COND.(Max or Min)	MAN. "n" FOR PIPE	PIPE SLOPE (FT/FT)	Q (CFS)	V* (FPS)	RIPRAP SIZE	Rt (in)	Al (ft)	Aiw (ft)	Atw (ft)
Storm Str. #101	30	MIN	0.012	0.010	46.30	10.05	R-5	27	20	7.5	27.5
Storm Str. #201	15	MAX	0.012	0.010	5.11	5.29	R-3	9	6	3.75	6.15

* The anticipated velocity (V) should not exceed the maximum permissible shown in Table 6.6 for the proposed riprap protection. Adjust for less than full pipe flow. Use Manning's equation to calculate velocity for pipe slopes ≥ 0.05 ft/ft.

DYNAMIC ENGINEERING CONSULTANTS, PC
DESIGN • ENVIRONMENTAL • LAND SURVEY • TRAFFIC

REV.	DATE	COMMENTS	BY

EROSION & SEDIMENT CONTROL PLANS

DRAWN BY: NJS | DESIGNED BY: MS | CHECKED BY: MAW | CHECKED BY: –

PROJECT: **SWATARA PAXTON DEVELOPERS LLC**
PROPOSED WAWA FOOD MARKET & FUELING STATION
PARCEL NO. 63-022-037
US ROUTE 322 & BRIDGE ROAD (SR 2018)
TOWNSHIP OF SWATARA, DAUPHIN COUNTY, PENNSYLVANIA

811 Know what's below. Call before you dig.
PROTECT YOURSELF
ALL STATES REQUIRE NOTIFICATION OF EXCAVATORS, DESIGNERS, OR ANY PERSON PREPARING TO DISTURB THE EARTH'S SURFACE ANYWHERE IN ANY STATE
FOR STATE SPECIFIC DIRECT PHONE NUMBERS VISIT: WWW.CALL811.COM

DYNAMIC ENGINEERING
LAND DEVELOPMENT CONSULTING • PERMITTING
GEOTECHNICAL • ENVIRONMENTAL
TRAFFIC • SURVEY • PLANNING & ZONING
826 Newtown Yardley Road
Suite 201, Newtown, PA 18940
T: 267.685.0276 | F: 267.685.0361
Offices conveniently located at:
Lake Como, New Jersey • T: 732.974.0198
Chester, New Jersey • T: 908.879.9229
Wall-N.J., New Jersey • T: 856.354.2000
Newark, New Jersey • T: 973.733.7200
Toms River, New Jersey • T: 732.974.0198
Newtown, Pennsylvania • T: 267.685.0276
Philadelphia, Pennsylvania • T: 215.233.4888
Bethlehem, Pennsylvania • T: 610.398.4400
Allen, Texas • T: 972.534.7700
Houston, Texas • T: 281.789.6400
Kyle, Texas • T: 512.644.7516
Delray Beach, Florida • T: 561.921.8570
Annapolis, Maryland • T: 443.567.3000
www.dynamicec.com

JUSTIN A. GEONNOTTI
PROFESSIONAL ENGINEER
PENNSYLVANIA LICENSE No. 080629

MARK A. WHITAKER
PROFESSIONAL ENGINEER
NEW JERSEY LICENSE No. 41417

TITLE: E&S DETAILS

SCALE: (H) AS (V) SHOWN | DATE: 11/21/2023
PROJECT No: 1478-99-212

SHEET No: 34 OF 34 | Rev. #: 0

Plotted: 11/22/23 – 12:44 PM, By: nschechter
File: P:\DECPC PROJECTS\1478 Paramount Realty\99-212 Swatara PA\Dwg\Land Dev Plans\D1478992123ED0.dwg, ---> 34 E&S DETAILS

COPYRIGHT © 2023 – DYNAMIC ENGINEERING CONSULTANTS, PC – ALL RIGHTS RESERVED